British Broadcasting Corporation

Master Series

Compact Microcomputer

Service Manual

Part No. 0458,002
Issue 1
October 1986

BRITISH BROADCASTING CORPORATION
MASTER SERIES COMPACT COMPUTER SERVICE MANUAL

SECTION 1 KEYBOARD and PROCESSOR PAGE 1

SECTION 2 MONITOR STAND PAGE 46

SECTION 1

BRITISH BROADCASTING CORPORATION
MASTER SERIES COMPACT MICROCOMPUTER SERVICE MANUAL

KEYBOARD and PROCESSOR

Within this publication the term 'BBC' is used as an abbreviation for 'British Broadcasting Corporation'.

Copyright Acorn Computers Limited 1986

Neither the whole or any part of the information contained in, or the product described in, this manual may be adapted or reproduced in any material form except with the prior written approval of Acorn Computers Limited (Acorn Computers).

The product described in this manual and products for use with it, are subject to continuous development and improvement. All information of a technical nature and particulars of the product and its use (including the information and particulars in this manual) are given by Acorn Computers in good faith. However, it is acknowledged that there may be errors or omissions in this manual. A list of details of any amendments or revisions to this manual can be obtained upon request from Acorn Computers Technical Enquiries. Acorn Computers welcome comments and suggestions relating to the product and this manual.

All correspondence should be addressed to:-

Technical Enquiries
Acorn Computers Limited
Newmarket Road
Cambridge
CB5 8PD

All maintenance and service on the product must be carried out by Acorn Computers' authorised dealers. Acorn Computers can accept no liability whatsoever for any loss or damage caused by service or maintenance by unauthorised personnel. This manual is intended only to assist the reader in the use of this product, and therefore Acorn Computers shall not be liable for any loss or damage whatsoever arising from the use of any information or particulars in, or any error or omission in, this manual, or any incorrect use of the product.

This manual is for the sole use of Acorn Computers' authorised dealers and must only be used by them in connection with the product described within.

First published 1986
Published by Acorn Computers Limited

BBC Master Series Compact Microcomputer Service Manual

Contents - Section 1

1 - Introduction

2 - Packaging and installation

3 - Disassembly and assembly

4 - Selection links and Test Points

5 - Hardware description
5.1 Introduction
5.2 Core machine
5.3 Internal I/O
5.4 External I/O

6 - Fault finding

6.1 Switch on
6.2 Sideways RAM
6.3 Video
6.4 Joystick Port
6.5 Serial Port
6.6 Disc drive interface
6.7 Parallel printer port
6.8 Expansion connector
6.9 Sound output
6.10 Econet
6.11 Non Volatile Memory

Appendix

1 Introduction

This manual is intended to provide the information required to diagnose and repair faults on the BBC Master Series Compact Microcomputer.

The information contained in this manual is aimed at service engineers and Acorn dealers who will be servicing the BBC Master Series Compact Microcomputer on behalf of Acorn Computers Ltd.

2 Packaging and installation

The microcomputer is supplied in a two-part moulded polystyrene packing in a cardboard box. It is supplied with a Welcome Guide, Welcome Disc, VIEW reference card, VIEW / ABC keyboard insert, a Logotron LOGO guide and a guarantee card.

Do not use the microcomputer in conditions of extreme heat, cold, humidity or dust or in places subject to vibration. Do not block ventilation under or behind the computer. Ensure that no foreign objects are inserted through any openings in the microcomputer.

3 Disassembly and assembly

To service the BBC Master Series Compact Microcomputer, first disconnect the power supply to the computer, and remove all peripheral connections from the computer.

To disassemble

Undo the four fixing screws under the case of the main unit. Lift the top part, containing the keyboard, carefully from the back. The keyboard connector may now be removed from the printed circuit board by gently rocking the connector on the pcb to the left and the right.

The keyboard unit may itself be removed from the upper part of the case, by undoing the six mounting screws.

The speaker may be disconnected from the main pcb by removing the connector from PL1.

To remove the main printed circuit board, undo the five fixing screws, remove the expansion connector cover, and gently lift the circuit board from the left (or West) end.

If it is necessary to remove the speaker, lift it straight out of its mounting area.

To reassemble

Replace the main printed circuit board by putting the right hand edge (with expansion connector) in first and pushing it gently until the board drops into the case lower. Replace the five PCB fixing screws and the expansion connector cover.

If the speaker has been removed from the case lower, it should be replaced by gently pushing it home. The loudspeaker should be connected to PL1.

If the keyboard has been removed from the case upper, it should be remounted, using the six screws previously removed.

Reconnect the keyboard to the main PCB by pushing the connector onto the pins. Ensure that all the pins are correctly engaged.

Replace the case upper on the lower part, ensuring that you do not trap the keyboard connector, and replace the four fixing screws.

4 Selection links and test points

Link positions

The following link positions can be set to alter various actions inside the computer.

PL7 - If fitted, this allows the light pen strobe (LPTSTB) to be connected to the CRTC IC. Factory position - NOT FITTED. Fit if required with tinned copper wire, or fit two pins and use a mini shunt.

PL9 - If set North, the video output will be normal. If set South the video output will be inverted. Factory position - NORTH. If change is required, cut circuit board track, and either use tinned copper wire, or fit three pins, and select the required position using a mini shunt.

PL10 - If set East, the RGB CSYNC signal will be inverted. If set West, it will be non inverted. This is necessary for certain monitors. Factory position - EAST. If change is required, cut circuit board track, and either use tinned copper wire, or fit three pins, and select the required position using a mini shunt.

PL11 - If set North, 32k ROM space banks 0 and 1 are assigned to the edge connector. If set South. 32k ROM space banks 0 and 1 assigned to IC38. Factory position - NORTH. Connector is made as a mini shunt, which may be adjusted as required.

PL12 - If set North, allows system ROM containing 64k bytes of code. If set South, allows ROM containing 128k bytes. Factory position is currently NORTH, but may change to SOUTH in future production. Connector is made as a mini shunt, which may be adjusted as required.

Circuit board modifications necessary for fitting optional components.

VR1 - If a volume control is required for the loudspeaker, a preset potentiometer VR1 may be fitted. If this modification is done, first cut the circuit board track joining two pins of VR1.

FS1 - A fuse (FS1) may be fitted if required, first cut the track under FS1 on the PCB.

L1/L2 - If further filtering (L1 and L2) is used, the tracks under L1 and L2 on the main PCB must be cut.

Test Points

TP1 - MAX232 -ve output. If the serial interface is fitted, the voltage on this pin should be between -10v and -5v. A figure of -9v is quite typical.

TP2 - MAX232 +ve output. If the serial interface is fitted, the voltage on this pin should be between 5v and 10v. A figure of 9v is quite typical.

Test points TP1 and TP2 are positioned close to IC5 (North of the PCB).

TP3 - connected to the CPU NOT NMI pin. This should be generally at 5v while running, making excursions to 0v only when disc and Econet are being used.

TP4 - connected to the CPU NOT IRQ pin. Check that this is not stuck either high or low when free running.

TP5 - connected to the CPU SYNC pin. This is asserted during an op-code fetch by the processor, and is used by ACCON to ensure that the correct memory area is accessed at this time. If this is continuously high or low, then the processor has completely stalled.

TP6 - This is connected to the processor READ/NOT WRITE line. This should change between 0v and 5v frequently (but not necessarily regularly!)

Test points TP3 to TP6 are situated South of the CPU IC28 (65C12) to the southeast of the PCB.

5 Hardware description

5.1 Introduction

The Master Series Compact Microcomputer consists of a central processing unit with associated memory and various input/output devices for communication with external equipment.

The Core Machine

All input/output (I/O) computing is performed by a 65C12 CPU with its principal ancillary components:-

128 Kbyte of Dynamic Random Access memory. Dedicated hardware can be used to expand this almost indefinitely. Further paged RAM (through the expansion connector) would also be possible.

Read Only Memory 64k bytes of ROM are provided as standard with this machine, although this may be upgraded with later issues to provide 128k bytes of ROM as standard. On board provision to extend the ROM capacity by 80k bytes is made, although using external expansion this could also be expanded almost indefinitely.

Internal I/O

Various I/O devices operate solely within the confines of the system to either improve facilities or increase throughput. These are as follows:-

6522 VIA devices - Two of these are provided and interface to:-

a) A 93 contact keyboard with 2 key rollover.

3-Channel sound generator with additional noise channel.

Non Volatile memory

2) The Printer Port

The Joystick Port

Part of Expansion Port

External I/O

Video display:- A 6845 CRT controller is provided to format the output for RGB. Composite video is also provided.

Disc Interface:- Facilities to both save and retrieve data from standard Shugart connected media. A 3.5 inch disc drive is provided as standard for MFM discs. The hardware will also support FM recorded data, but the standard software provided will not support FM encoding.

Network Interface:- Connection to the ECONET is provided by a 68B54 Advanced Data Link Controller. This is fitted on a daughter board and may as such be fitted as an optional extra. It will also be necessary to fit the ANFS ROM to one of the internal ROM sockets. The daughter board used

is the same as for the Econet upgrade in the Master 128 Microcomputer.

Centronics Printer Port:- Connection is provided for the standard parallel printer port configuration.

Serial Port:- An RS232 standard interface is available as an optional upgrade. This upgrade may be achieved by plugging the relevant ICs into provided sockets - no soldering is required, and it is not necessary to remove the PCB from the case.

Joystick Port:- A connection to an 'Atari' type joystick is provided. This has a 9 way 'D' type plug. The Machine Operating System reads the values from the joystick in such a way to maintain compatibility with software for previous machines that used analogue joysticks and an Analogue to Digital Converter (ADC).

50 way Expansion Connector:- This allows the connection of many external items to the computer. Many connections to the various system buses are provided, as are the signals required for external paged ROMs.

5.2 Core machine

Operation of the RAM and ROM is controlled by the Memory Controller integrated circuit. The principal function of this device is to control the memory paging structure.

Memory Map

The 65C12 can directly address 64K locations. As over 1/2 Mbyte may be resident (depending on the users configuration), a paging scheme is implemented to allow access to it.

The basic memory assignment is as follows:

```
 ---------------------------  <--&FFFF
|                           |
|          ROM              |
|---------------------------| <--&FF00  \  Memory
|       I/O OR ROM          |            } Mapped
|---------------------------| <--&FE00  /   I/O
|                           |
|          ROM              |
|                           |
|---------------------------| <--&E000
|                           |
|    ROM/RAM (REGION b)     |
|                           |
|---------------------------| <--&C000
|                           |
|    ROM/("Sideways" RAM)   |
|                           |
|---------------------------| <--&8000
|                           |
|                           |
|     RAM/"Shadow" RAM      |
|       (REGION a)          |
|                           |
|---------------------------| <--&3000
|                           |
|          RAM              |
|                           |
|                           |
 ---------------------------  <--&0000
```

Figure 1

The current memory map is dictated by the contents of the two latches, ROM SELect and ACCess CONtrol located at &FE30 and &FE34 respectively. The contents of these two latches are as follows:-

	d7	d6	d5	d4	d3	d2	d1	d0
(&FE30)	RAM	0	0	0	PM3	PM2	PM1	PM0
(&FE34)	IRR	TST	IFJ	ITU	Y	X	E	D

The contents of ROMSEL dictate the selection of memory which resides from &8000 to &BFFF.

ACCCON

The contents of ACCCON principally dictate the activity of two regions of memory:

(a) &3000 to &7FFF
(b) &C000 to &DFFF

128 Kbyte RAM

The RAM is functionally split up into two regions: The main region supports the language workspaces, buffers etc. and provides the bit mapped screen. The second region provides four 16K "Sideways" RAM segments. These are selected into ROM areas.

Within the main 64 Kbyte region, the lower 32K is used within the &0000 to &7FFF region of the CPU memory map, as shown in figure 1.

The upper 32K is split up into three, self-contiguous regions. The largest portion of this is a 20 Kbyte region designated LYNNE. This can be overlayed on the region (a) of main memory, and is sometimes referred to as 'SHADOW' RAM.

* When bit D in ACCCON is set, the CRT controller will display the contents of LYNNE. When bit D is cleared, the region (a) of main memory will be displayed.

* When bit E in ACCCON is set, if the address range is &3000 to &7FFF the CPU will read/write Lynne according to the flow shown in figure 2.

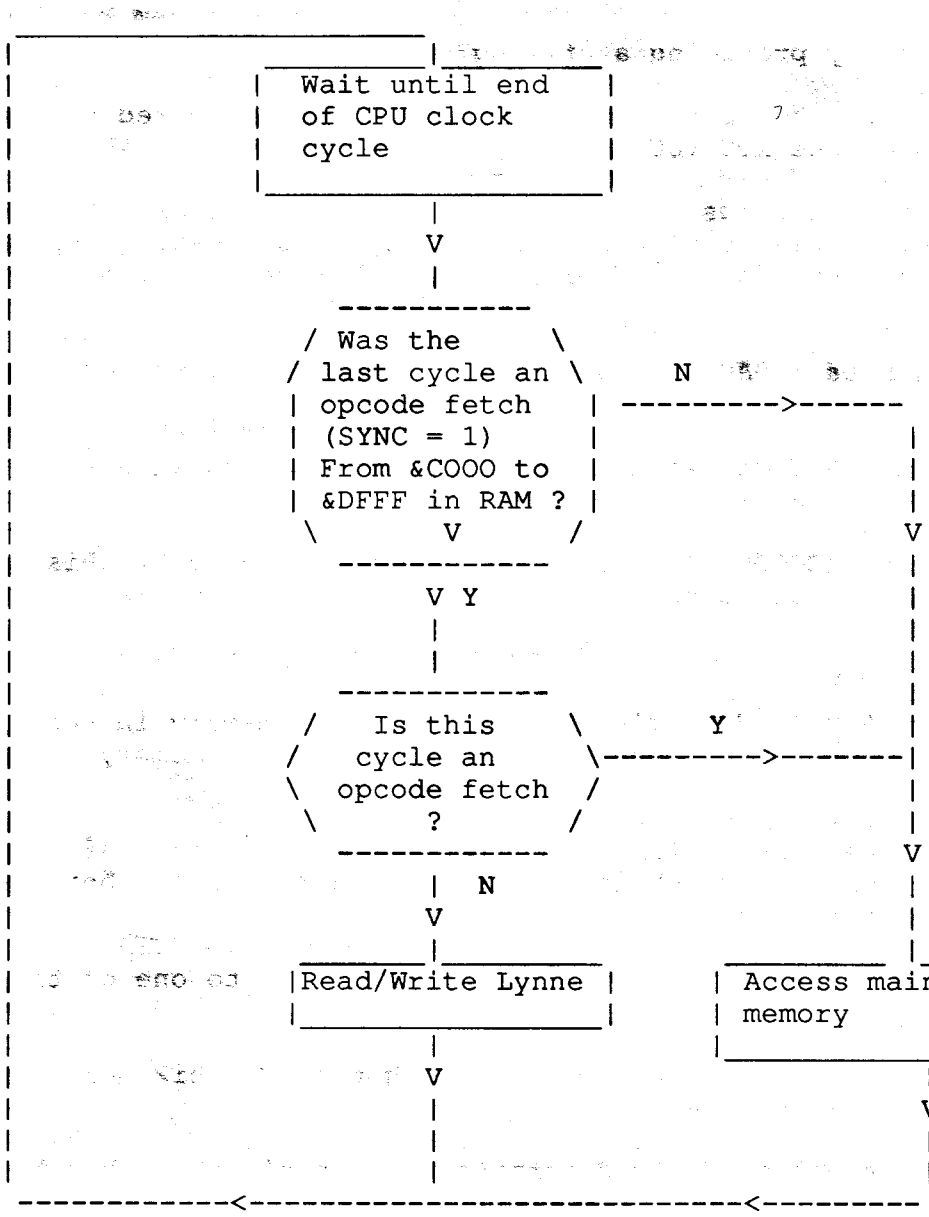

Figure 2

This system allows for the screen bit map to be removed from the main CPU memory map, of which it occupies a significant proportion. It will, however, only work if the screen is being accessed by opcodes from a known region - i.e. the MOS VDU drivers. A mechanism is also provided to permit 'illegal' screen access:

* Bit X in ACCCON, when set, causes all accesses to region (a) to be re-directed to LYNNE. This occurs irrespective of the opcode address, hence considerable care will have to be exercised in its use. When cleared, the memory map returns to its usual format.

In the same way that the BASIC variable HIMEM will always have the value &8000 when LYNNE is used, it is desirable for the variable PAGE to have the value &E00, irrespective of the current filing system.

This is achieved by providing a filing system workspace as follows:-

* Bit Y in ACCCON when set, causes 8 Kbyte of RAM referred to as HAZEL to be overlayed on the MOS VDU drivers, i.e. from &C000 to &DFFF.

Clearly, when this bit has been set, no calls may be made to the MOS for VDU operation. The code which performs this paging operation is responsible for resetting the Y bit, as no hardware is provided for this purpose.

The remaining bits in ACCCON are used to control various peripheral systems:-

* The bit ITU in ACCCON when set enables the CPU to access the internal second processor rather than the external one.

* The bit IRR in ACCCON is InterRupt Request. When set, this bit causes an open drain output to pull the CPU NIRQ pin down to Vss.

ROMSEL

The contents of ROMSEL determine the paging of memory in the 16K region &8000 to &BFFF. One of sixteen, unique 16 Kbyte ROM memory segments may be selected.

In this way, fewer connections to the controller logic are required to select a given ROM, although the power dissipation will be increased if all the ROMs in one column are inserted.

A chip select will be driven low if an access to one of the on-board segments is required.

An output enable is turned active low during the CPU phi2 period depending on which segment is required.

The segment to be selected is determined by the binary number held within the least significant nibble of ROMSEL.

Overlaid RAM in ROM area

When the bit RAM is set in ROMSEL, accesses to the region &8000 to &8FFF are redirected from the currently selected ROM to a region of RAM referred to as ANDY. It is the responsibility of the code which set RAM to clear it after accessing ANDY. This is necessary to ensure correct operation of software in ROM.

Summary of RAM memory map

The 64K of DRAM is distributed as follows:-

```
          FFFF  ------------------ 7FFF          \
         /      |                  |     \   With   \
        |       |                  |      >  E or X  \
        |       |                  |     /   active   |
        | B000  |------------------| 3000             |
   RAM          |                  | DFFF\            |
ADDRESS         |                  |      > With      |
        |       |                  | C000/  Y active  | CPU
        | 9000  |------------------| 8FFF\            > ADDRESS
        |       |                  |      >           |
        | 8000  |------------------| 8000/  RAM active|
        |       |                  |                  |
        |       |                  |                  |
        |       |                  |                  |
         \      |                  |                 /
          0000  ------------------  0000            /
                                          \__   __/
                                             \/
                                       Bits in ACCCON
```

Figure 3

A further 64 Kbyte of RAM is available as four pages of 16 Kbyte from &8000 to &BFFF.

5.3 Internal I/O

Slow peripherals:- These are subsystems which are provided with data from port A of the system VIA. This data is stable until next programmed by the CPU.

Keyboard

General description:- 93 keys are provided. 92 of these are in a modified 8 x 13 matrix as shown in figure 4. During idle (free run) mode, pressing any key will cause an IRQ to be generated via the system 6522. Interrupts thus generated are controlled by the 6522 control register. Depression of either of the shift keys, or the control key does not cause an interrupt to occur.

Keys are arranged as a QWERTY style keyboard with extra keys for a numeric keypad. Ten additional 'function keys' together with cursor control buttons, etc., are provided.

The "BREAK" key will reset the CPU and abort any access to the clock/RAM chip. To prevent accidental operation, a mechanical lock is provided. This is a plastic cam which is rotated through 90 degrees to stop the keytop from being depressed.

Keyboard Operation:- During free run mode, the keyboard column lines are continually scanned by incrementing a counter, decoding its outputs and pulling low a column line. Any key depressed will cause the interrupt to be generated. A signal, NOT KeyBoard ENable is generated to stop free running mode. The counter contents are now loaded by CPU operation to determine on which column the key was pressed. The rows are then individually selected to determine which key was pressed.

The keyboard support TTL chips are supplied with data from the slow data bus:-

SA0 to SA7:- These are the slow bus connections. SA0 to SA3 are the column select inputs and SA4 to SA6 are the row select inputs. SA7 is a three state connection which is driven active low when a row/column combination describes a depressed key.

R19 to R26:- The keyboard row input connections are normally held high by pull-up resistors. If a key is depressed it will cause the appropriate row connection to be pulled low when its column is selected.

CA2:- Connected to the system VIA, this output will cause the VIA to generate an IRQ. The line will be active low when an active key is detected.

nKBEN:- Generated by the system VIA, this line is taken low when scanning the keyboard matrix.

1MHz:- This is the timing reference.

The Keyboard Matrix

The keys are physically arranged as a QWERTY type keyboard with 10 function keys, 4 cursor control keys and a 19 key numeric keypad. The matrix is as follows:-

	C0	C1	C2	C3	C4	C5	C6	C7	C8	C9	C10	C11	C12
R0	ESC	f1	f2	f3	f5	f6	f8	f9	| \	curs rt	4′	5′	2′
R1	TAB	Z	sp	V	B	M	< ,	> .	? /	copy	0′	1′	3′
R2	SHIFT LOCK	S	C	G	H	N	L	+ ;	}]	del	#′	*′	,′
R3	CAPS LOCK	A	X	F	Y	J	K	◻ ◻	* :	ret	/′	del′	.′
R4	! 1	" 2	D	R	& 6	U	O	P	{ [	curs up	+′	-′	ret′
R5	f0	W	E	T	′ 7	I	) 9	@ 0	£ _	curs down	8′	9′	
R6	Q	# 3	$ 4	% 5	f4	(8	f7	= -	~ ^	curs left	6′	7′	
R7	SHIFT	CTRL											

Figure 4

Sound Generator

The sound generator is an SN76489 device. Three sound channels plus one pseudo random noise channel are provided. The full description of it is found in the manufacturers data sheet. It is provided with a reference clock of 4MHz from central timing. The output is filtered as described in the section 'Audio Circuitry'.

Non volatile memory

128 bytes of non-volatile memory are provided by IC24. This is a serial access device, which operates on a special 'Inter-integrated circuit' serial bus, known as an 'I squared C' bus. This bus is emulated by lines PB4 and PB5 on the system VIA. The write cycle time for this device is determined by R1 and C2. The PCD8572 data sheet should be consulted for further details. It is an Electrically Erasable and Programmable Read Only Memory (EEPROM or E squared PROM). This device is socketed, due to its finite life, and the guarantee is only valid for the PCD8572 working on delivery. The use of this device means that battery backup is not required

for retention of non-volatile memory.

System VIA:- A 6522 allows several sources to create maskable interrupts. The sources are:-

a) CRTC vertical synchronisation.
b) CRTC light pen strobe.
c) Keyboard key detect.

It also provides the previously mentioned slow data bus.

Port B on this device generates and reads a number of internal hardware strobes. These are as follows:-

Port B Data (D7 … D0)	Strobe	Active Level
X X D X X X X X	Non-Vol Ram Serial Clk	
X X X D X X X X	Non-Vol Ram Serial Data	Input/Output
X X X X D 0 0 0	Sound chip select	L
X X X X D 0 1 1	Keyboard enable	Q
X X X X D 1 0 0	C0 } Screen control	L
X X X X D 1 0 1	C1 } Signals	H
X X X X D 1 1 0	Caps Lock indicator	L
X X X X D 1 1 1	Shift Lock indicator	L

Figure 5

5.4 External I/O

1MHz External I/O:-

Screen Output:- There are two chips primarily responsible for providing the screen output:-

a) 6845 (IC34)
b) Acorn proprietary VIDPROC (IC16)

High Resolution Modes:- The 6845 generates a linear memory address sequence which increments every 0.5 us or 1us, depending on the video bandwidth selected and video data format.

The amount of memory reserved for screen use is also varied. The available options are shown in figure 6

Video Data Formats

"Mode"	Format Pixels/Byte	Reserved Memory Bytes	
0	8	20K	
1	4	20K	
2	2	20K	
3	8	16K	
4	8	10K	
5	4	10K	
6	8	8K	
7	Teletext	1K	
128	8	20K	\
129	4	20K	|
130	2	20K	| Reserved
131	8	20K	> in
132	8	20K	| LYNNE
133	4	20K	|
134	8	20K	|
135	Teletext	20K	/

Figure 6

All modes except 7 and 135 display a bit mapped image of the reserved memory. The 6845 may be re-programmed to display any arbitrary section of memory. If this is done, however, the hardware scrolling will not work correctly, as it assumes that the screen memory is in its usual location. The screen always ends at &7FFF and starts 1,8,10 or 20K further down than that, depending on the selected mode.

The selection of video bandwidth and data format is performed by programming the VIDPROC. Special measures have been taken to ensure correct cursor operation in the Teletext modes.

Teletext

The Teletext modes do not generate a bit mapped display, but a character cell one. The character/graphics ROM within a SAA5050 device generates RGB signals according to the desired character/graphics information within the reserved memory space. Each byte of memory is therefore just a definition of the character/graphics symbol required.

Other SAA505X devices may be used when different languages are required. Only 1 Kbyte of memory is needed for either of the Teletext modes, although 20K is reserved for it in mode 135.

The VIDPROC has to be re-programmed to use the SAA5050 RGB outputs.

The 6845 is still used to generate the cursor. As a delay of 2.75 us will occur after a character is read from RAM, before outputting the appropriate RGB signals, the 6845 has to be programmed accordingly. The "start" of screen signal is given a 1.5 byte-time offset, and the SAA5050 has a further 1 byte-time offset to restore the correct cursor/data phase.

The VIDPROC has further adjustment which allows for the cursor to be adjusted to pixel accuracy.

Hardware Scroll:- Scrolling may be achieved in any mode by re-programming the 6845 start of screen address to an integral number of video lines further down the memory map than the nominal start of screen.

This of course causes the linear address generator to attempt to display an end of screen which is out of the reserved video area. To overcome this effect, hardware scrolling is provided with a variable address wrap-around.

In effect, when the address generator would otherwise attempt to access out-of-screen RAM, its addresses are modified to point to the gap between the original start of screen and scrolled start of screen. When this is done, only the end of screen needs to be written over in RAM. (If this is not done, the entire screen appears to "roll-over"). The amount of modification to be used is controlled by two nodes; C0 and C1.

Video Output:- Two outputs are provided for displaying video data.

These are:

a) Composite video. This is a 1v peak to peak signal.

b) Digital Red, Green, Blue outputs. These are approximately 75 ohm outputs.

Joystick Port:- A 9 way 'D' type plug (PL8) is provided for connection to external devices. It is compatible with existing 'ATARI' type joysticks whose digital outputs are converted by the operating system into suitable 'ADVAL's to emulate BBC analogue joystick operation.

The port is derived from port B of the user VIA, without extra buffering, and may thus also be used for output as well as input. The 6522 data sheet should be consulted for further details. For applications requiring the use of the 'USER PORT' as used in other BBC computers, the three signals that are not provided on the joystick port (PB5, PB6 and PB7) are available on the expansion port.

If link PL7 is made, a light pen may be connected to the signal LPSTB. This also causes the system VIA to generate an IRQ (if enabled). It also causes the 6845 CRTC to latch the address of the currently selected video data byte. This may not be the same as the displayed byte, and some software correction may be necessary. Factors such as phosphor characteristics, light pen response and the angle at which the pen is used, may all affect the correction needed.

Expansion Connector

This connector provides various signals suitable for connection to external peripherals. The signals provided are as follows:-

Pin	Side a (solder side)	Side b (component side)
1	SCREEN (0v)	SCREEN (0v)
2	+5v	+5v
3	AT13	A10
4	NOT RST	CD3
5	AA15	A11
6	A8	A9
7	A13	CD7
8	A12	CD6
9	phi 2 OUT	CD5
10	not connected	CD4
11	not connected	LPTSTP
12	B READ / NOT WRITE	BA7
13	NOT NMI	BA6
14	NOT IRQ	BA5
15	NOT INFC	BA4
16	NOT INFD	BA3
17	AA14	BA2
18	NOT 8MHz	BA1
19	0v	BA0
20	PB7 (old user port)	CD0
21	PB6 (old user port)	CD2
22	PB5 (old user port)	CD1
=========POLARISATION SLOT=========		
24	0v	0v
25	SCREEN (0v)	SCREEN (0v)

Figure 7

Serial Port

The serial interface is not fitted as standard. The modification to fit the serial interface only requires the insertion of the relevant ICs into

their sockets. No soldering is therefore required.

U.A.R.T.:- The device responsible for providing most of the serial port functions is the 6850 UART. This has all the receive/transmit and data formatting/error checking that is neccessary for both systems.It is fully described in the March 1983 edition of the Hitachi Microcomputer Databook.

SERPROC:- The ACORN proprietary part, the SERPROC is effectively a multiplexer and baud rate generator for the 6850.

Buffer:- The RS232 data and control lines are buffered by a MAX232 IC. This device produces the necessary voltages required for RS232 operation from a single +5v supply.

The clock for the serial system is derived from the 16Mhz clock by IC9 (74ALS169) acting as a divider.

2MHz External I/O

One peripheral device operates at 2MHz. This is the ECONET connection. This requires an extra hardware upgrade. Connection is made to the ECONET by a five way DIN connector mounted on the main circuit board. The interface electronics including the 68B54, line drivers, receivers and chatter disconnect components are mounted on a separate circuit board. This board has two connectors:-

a) A 5 way connector which has a one-to-one connection with the DIN connector.

b) A 17 way connector provides the CPU data bus together with address, timing reference, chip select and interrupt signals. The main pcb has two further address connections for future expansion.

6 Fault finding

This section goes step by step through fault finding in each section of hardware. It should be studied in conjunction with the circuit diagram and component location tables in the Appendix.

If any part of the machine is suspected of being faulty, the following points should always be checked first:

1) no loose connectors and broken cables

2) no broken or shorting tracks

3) ICs plugged into their sockets correctly

4) power supply working and reaching the components concerned

5) all digital signals are either at clean TTL logic levels (greater than 2.4V for 1, less than .5V for 0), or clean CMOS logic levels (greater than 3V for 1, less than 1V for 0). On timed signals this must be true for the period 150ns before phi2 on read cycles and 300ns before phi2 on write cycles.

Hints for repair:

1) Never solder to a computer which is switched on.

2) Remove all user ROMs before starting (Remember to put them back afterwards!)

3) Use sharp pointed meter probes to push through solder resist. This will make finding short/open circuits more reliable.

4) Always suspect connectors.

5) If you find a recurrent fault (e.g. more than 10 machines), let us know at ACORN so that we can include it in this manual if appropriate.

The following items of test equipment are required for fault finding:

A set of screwdrivers

Pliers

Cutters

Multimeter

Logic probe

5 ohm 5W resistor

The repair will be quicker with:

100MHz dual beam oscilloscope

Good quality scope probes

Spare monitor

Spare disc drive

Frequency counter

A known good computer to use as a signal model

Note: the Peripheral Bus Controller IC26 is used to buffer the data bus around the system. It also isolates many parts of the system from each other to help improve reliability. It may disguise data bus failures or open circuits. Be sure not to assume that any node is connected to any other unless you have checked it. This particularly applies to the SAA5050 and all 1MHz operating components. E.g. the User VIA going down could stop the System VIA.

6.1 Switch on

Connect the suspect microcomputer to an RGB monitor.
Connect the mains supply and switch on both the monitor and the computer. One of the following will happen.

6.1.1 There is noise on the monitor screens (no signal from computer). There is no power-on beep sound and the keyboard power indicator does not light.

Results: the power supply is dead.

Check that the power supply can provide five volts. The centre of the plug is positive. If the power supply has failed, refer to the section regarding the monitor stand unit.

6.1.2 The power supply is working (the keyboard indicator is lit), but nothing else happens.

Results: There is a board fault.

Follow the sequence of checks shown below.

1 Check that all ICs have power and ground on the correct pins at the correct voltage. Make good any dry joints.

2 Feel whether any of the ICs are very hot. The 6845, VIDPROC and RAM chips will always be quite warm. Check for shorted PCB tracks. Clear shorted tracks and then replace any affected ICs.

Note: ICs which get abnormally hot due to a fault, but which work after the fault has been cured, should still be replaced. Their long term reliablility may well be impaired.

3 Check the 16MHz oscillator output IC10 pin 2, and check that it is reaching the VIDPROC IC16 pin 8. The signal should be reasonably clean, 4V peak to peak. If not then check the crystal controlled oscillator circuit formed by half of IC10 and X2.

Warning: if the system 16MHz clock does not work, the DRAM RAS and CAS lines could be held low. This can make the ICs heat up causing permanent damage. If the oscillator is not working, or the clock is not reaching the VIDPROC, try to find the fault and repair it as quickly as possible. Do not leave the computer switched on for more than 30 seconds at a time.

4 Check the 1 2 4 and 8 MHz signals from the VIDPROC, IC16 pins 4 5 6 and 7 respectively. If any is missing, or is not a clean square wave with TTL logic levels then replace the VIDPROC IC16.

5 Check that there is a clean 2 MHz signal on the CPU clock input, IC28 pin 37. If it is missing or incorrect then check for broken or shorting track.

6 Check that the system ROM is plugged in.

7 Check that all data and address bus lines are clear of shorts between themselves, +5V and ground.

8 Check the RAS and CAS signals to the main DRAMs, ICs 35 and 41, pin 5 (RAS) and pin 16 (CAS).

The main DRAM timing is shown in figure 8

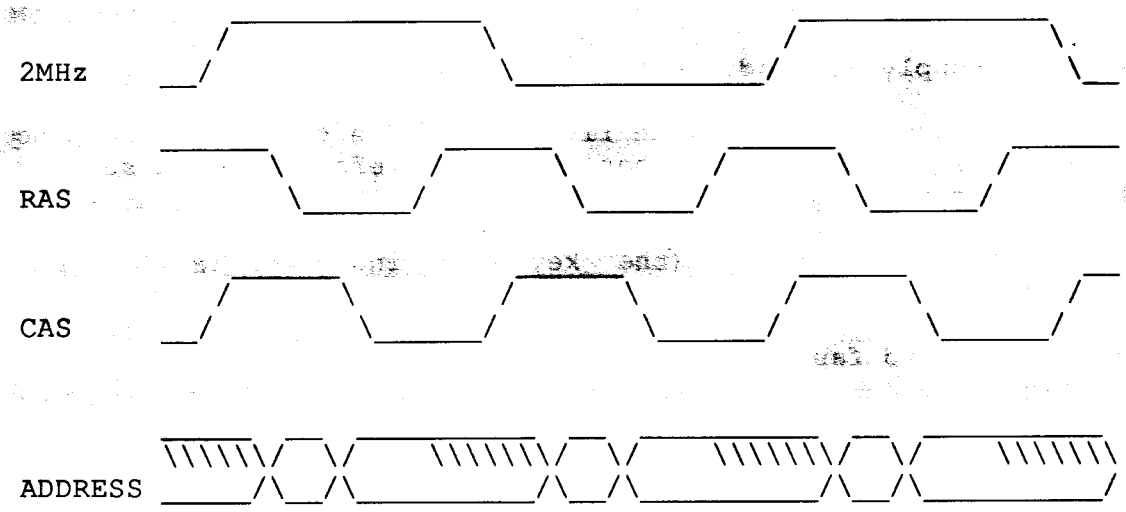

Figure 8 DRAM timing

RAS and CAS should be good 4MHz square waves. If one or both is missing then check for shorted tracks. Remember the DRAMs can be destroyed if RAS is stuck low.

RAS is generated from 4M and 8M by the D-type IC8 pin 9.

CAS for the main DRAMs is generated from 2M, inverted by IC10 to give phi2 IN, gated by a NAND gate in IC18 with DRAMEN which enables the main RAM, and finally gated with 4M through another NAND in IC27.

9 Check the multiplexed address lines into the main DRAMs, ICs 35 and 41 pins 6 7 8 10 11 12 13 and 14. The address lines should switch after RAS, with an approximate 20ns hold time.

Also check that the address lines are correctly switching after phi2, as shown in figure 7.

6.1.3 There is a sort of display with rolling lines and/or diagonal stripes.

1 Check the MA and RA lines from the 6845 CRTC IC34. There are 14 MA lines from MA0 (pin 4) to MA13 (pin 17) inclusive. There are 4 RA lines from RA0 (pin 38) to RA3 (pin 35) inclusive (RA4 is not connected).

These lines form the video RAM addresses in the various screen modes. Check that they are not stuck, and that they oscillate between good logic

0 and logic 1 voltage levels. If not then first replace the 6845, then look for shorted tracks.

Check that all are getting through to the CRTC/MUX IC46.

2 Check VSYNC pin 40 IC34. This line should pulse low every 20ms.

3 Check HSYNC pin 39 IC34. This line should pulse low every 64us.

4 Check that CSYNC (both HSYNC and VSYNC superimposed) is available at IC10 pin 10 and also at pin 4 of SK9, the RGB connector.

5 If the RGB display alone is not working then the CSYNC polarity for that particular monitor is probably incorrect. Alter PL10.

6 Check all video connections.

6.1.4 There is a cursor stuck at the top left corner of the screen, but nothing else.

Check all connections to and from the keyboard. Check TTL ICs IC43, IC44, IC32, IC33, IC45 and the keyboard connector. The ICs are unlikely to be at fault, as these are quite reliable.

6.1.5 The screen says

ACORN MOS

ACORN ADFS

but nothing else.

Try typing CTRL F BREAK. If this works then either connect up a disc drive and put a formatted disc in it or type

*configure nodir RETURN

Turn the power on and off. The machine should now work.

3 The configuration memory may have been set incorrectly or is faulty. Turn the power off and on again whilst holding down the R key. Then press CTRL F BREAK. All previous configuration commands will be reset to zero.

6.1.6 BASIC is printed on the screen, but no > prompt appears.

Check that the IRQ line on the CPU IC28 pin 4 is not stuck in one logic state. If it is then check the address and chip select lines of the system VIA IC25.

6.1.7 The BASIC prompt > appears, but the keyboard does not respond.

1 Check the address and ship select lines of the system VIA IC25.

2 Check all connections to the keyboard.

3 If all else fails then try a different keyboard. If this works, look for broken leads and tracks on the original one.

4 Check that the IRQ line IC28 pin 4 is not stuck low or high. The memory controller IC48, ACIA IC3 (if fitted), user VIA IC7, system VIA IC25 and PL13 edge connector all have direct connections to the IRQ line. The latter part has a link LK4 which can be used to isolate it from IRQ.

Note: the system VIA IC25 generates an interrupt every 100th of a second. If this interrupt is not cleared by the operating system each time it occurs the IRQ line will appear to be stuck low. This could occur if some other installed software is faulty or if an address or data line to the VIA is faulty.

6.1.8 Not all keys work on the keyboard.

1 If more than one key is affected, check for a faulty connection to the keyboard or a broken track in the middle of a row or column of the keyboard matrix.

2 If one key only is affected, check for a broken track at the end of a row or column in the keyboard matrix.

3 If it is not possible to find track faults, try replacing the whole keyboard assembly. It is not possible to replace individual keys on this type of keyboard, and it will be necessary to replace the whole keyboard.

6.1.9 The computer works, but random dots or characters appear on the screen.

1 Type a short program or piece of text into the machine - about two lines in any screen mode are adequate. Leave it for a few minutes and then see if the screen has been corrupted. If it has then there is a memory system fault. If it hasn't then enter a longer piece of program or text - enough to fill a screen and repeat the test.

Any fault showing itself will be due to a memory system failure. These are rarely due to the RAM chips themselves as these are usually very reliable. Check the following very carefully.

2 Check all connections from the CPU address bus (IC28 pins 9 to 20 and pins 22 to 25 inclusive) to the DRAM address multiplexers (ICs 37 39 and 40, see circuit diagram for pin numbers). Then check the voltage levels of these signals at the multiplexer input pins. All signals should have good CMOS levels (less than 1V for 0, greater than 3V for 1). A constant 0 or 5V level implies a short to the relevant power rail. Poor logic levels imply shorting to another logic signal.

3 Check that the address at the DRAM inputs is stable for at least 15ns after RAS goes low and changes no later than 50ns after that edge, see figure 8. This should occur once for every active high period of the system 2MHz clock out of the VIDPROC and once for every active low period.

4 Check that the noise around logic LOW signals is generally less than

500mV. If it is not, then some signals may be shorting or a decoupling capacitor may be missing.

5 Check that the data bus is properly connected between the CPU and the DRAMs.

6.1.10 You can type but get two or more copies around the screen.

1 Check IC34 pins 4-13 and 35-38 (the CRTC scanning outputs) shown on circuit diagram to the left of the CRTC IC34) to make sure that the correct addresses are being generated. Any line stuck high or low or shorting to another pin will give strange screen effects.

Note: MA13 IC34 pin 17 is used to switch the address multiplexing circuits between modes 7/135 and any other modes. This line should be static in any given mode.

2 Check that all of the lines from the CRTC IC34 to the CRTC Multiplexer IC46 actually get there.

3 Check that the lines C0 and C1 from the 74LS259 (IC31 pins 4 and 5) to the CRTC Multiplexer (IC46 pins 38 and 39) are properly connected and change at least once if you switch between modes.

4 Check that the lines from the CRTC/MUX IC46 to the DRAMs are correct with no short or open circuits.

6.2 Sideways RAM

1 Check all connections to the memory address multiplexers.

2 Check RAS and CAS at the DRAMs, see figure 8.

6.3 Video

To debug the video, both different types of monitor should be connected: RGB and composite.

6.3.1 The display scrolls vertically round the screen.

Does it occur on RGB and Composite video?

1 If so, check VSYNC is correct on the CRTC IC34 pin 40.

2 Then follow the signal through the exclusive-OR gates IC20 where it is combined with HSYNC. If the signal does not make good logic levels at any node, then there is probably a short in that area.

Note: when VSYNC (period 20ms) is EXORed with HSYNC (period 64us), the former will be difficult to spot within the latter. A way of getting round this is to synchronise the oscilloscope from the VYSNC output of the CRTC IC34 pin 40 and then examine the EXOR gate output.

Does it only occur on one of the video outputs?

1 Is the CSYNC polarity link PL10 correct for your monitor?

2 If it only occurs on composite video, check that all the resistors (R51 to 54 inclusive) to the output transistors are correct in accordance with the circuit diagram. Do they all have good signals going into them?

3 If it only occurs on RGB, check all the signals going to the back of the connector.

6.3.2 The display is correct vertically, but is broken into moving diagonal lines.

Does it occur on RGB and Composite video?

1 If so, check HSYNC is correct on the CRTC IC34 pin 39.

2 Then follow the signal through the exclusive-OR gates IC20 where it is combined with VSYNC. If the signal does not make good logic levels at any node, then there is probably a short in that area.

Note: when HSYNC (period 64us) is EXORed with VSYNC (period 20ms), the former will have the latter superimposed upon it. This will make the former appear to have glitches. This should be ignored in the measurement of HSYNC period.

Does it only occur on one of the video outputs?

1 Is the CSYNC polarity link PL10 correct for your monitor?

2 If it only occurs on composite video, check that all the resistors (R51 to R54 inclusive) to the output transistors are correct in accordance with the circuit diagram. Do they all have good signals going into them?

6.3.3 There is no colour on RGB

1 Check the RGB connections out of the VIDPROC IC16 pins 14 12 and 10.

2 If the fault is only in mode 7 or 135 then check RGB connections from SAA5050 IC15 pins 24 23 and 22 to the VIDPROC IC16 pins 13 11 and 9.

6.3.4 The screen displays the wrong colours.

Check 1 and 2 above.

6.3.5 The display works in all modes except 7 and 135.

These modes work very differently from the others, using IC15, the SAA5050. There are a number of faults which only exhibit themselves in these modes.

1 There is a cursor which can be moved, but no text. Check the 6MHz input to the SAA5050, IC15 pin 19. It will have a slightly variable duty cycle, certainly not 50%, but no part of the waveform should be narrower than about 40ns. If so, check all components and signals around the 6MHz generator IC20 and IC21.

2 The text is at all fragmented. Check as above.

3 Not all colours are present. Check all connections to the VIDPROC IC16. Are the pull-up resistors R29 to R31 present and the correct values?

4 Not all characters can be obtained. Check all data bus connections the the PBC IC26 pins 21 to 28.

5 Lines of normal size text appear cut in half. Check VSYNC at the CRTC IC34 pin 40.

6 Rounded characters appear unstable. Check the components and signals around the 6MHz generator IC20 and IC21.

7 Lines are broken up. Check all connections to the PBC IC26.

6.4 Joystick port

6.4.1 Gives incorrect readings on some or all channels

1 Check for continuity between PL8 and IC7. Are the connections to PL8 sound?

2 Is 5v available at PL8 pin 7 and 0v at PL8 pin 8? Otherwise the joysticks will not function properly.

3 Check that the software does not reconfigure port 'B' of the user VIA IC7 as outputs - look for any reference in the program to location &FE62, the data direction register.

4 Try with a different joystick, as joysticks are often badly abused and unreliable.

5 Check the user VIA IC7. This IC is fairly reliable, and replacement should be regarded as a last resort!

6.5 Serial port

6.5.1 Does not work at all.

1 Check that the upgrade has been performed correctly. The basic machine does not include the serial interface, and the upgrade should be checked carefully.

2 Are the data format and baud rate settings the same as the remote computer?

3 Is the cable properly connected?

Note: this connector CAN be inserted the wrong way up!

4 Are all the cable connections correct, i.e. no open/short circuits?

5 Are the device select connections to the SERPROC (IC14) and ACIA (IC13) from the IO controller correct (IC22 pin 34 and pin 36 respectively), with no short circuits to either power supply rail?

6 Is the SERPROC getting a 1.23MHz timing reference, IC14 pin25?

If it is not, check that it is available at IC9 pin 11, and if not, check that 16MHz is available at IC9 pin 2. If the 16MHz is available, try replacing IC9 (74ALS169 counter - socketed as it is part of the serial upgrade).

7 Are either CTS (IC14 pin 20) or RTS (IC14 pin 23) stuck high or low?

8 Are the voltages at the test points TP1 and TP2 within the correct voltage range? If not, check the power supply to the MAX232 IC, and try a replacement IC if the power supply is OK.

9 If all else fails, check all remaining connections to the ACIA and SERPROC.

6.5.2 Will only receive data.

1 Does the remote computer use different transmit and receive rates? If so check that your computer has the equivalent receive and transmit respectively.

2 Check 4 and 7 as above.

3 Check that data going into the line driver IC5 comes out of it. The driver could be faulty otherwise.

4 Check that the Tx CLK going into the ACIA is correct, IC13 pin 4.

6.5.3 Will only transmit data.

1 Does the remote computer use different transmit and receive rates? If so check that your computer has the equivalent receive and transmit respectively.

2 Check 4 and 7 as above.

3 Check that data going into the line receiver IC5 comes out of it.

4 Check that the Rx CLK going into the ACIA is correct, IC13 pin 3.

6.6 Disc drive interface

6.6.1 Refuses to work at all.

1 Check that both the signal connector and power connector are securely pushed home.

2 Try another disc drive if possible, to eliminate the chance of a fault in this.

3 Try the disc drive with another computer, if possible.

4 Check that the 1772 and 74LS174 have valid logic 0 levels at their device select inputs (IC6 pin 1 and IC1 pin 1) and that all data and address bus connections are present, with no open or short circuits. If

either IC is not being selected then check the outputs on the IO controller, IC22 pin 1 (FDCON) and pin 4 (FDC). If these signals are not available then check that the disc software is fitted and is selected.

6.6.2 The drive select light comes on.

You cannot read a catalogue.

1 Is the disc formatted and correctly installed in the disc drive.

2 Is the Read Data input to the 1772 (IC6 pin 19) oscillating when you attempt to read the disc? If not then check the signal cable and if necessary check that data is getting onto it from the disc drive.

3 Are the pull-up resistors (R9 - R12) on the 1772 disc inputs fitted and correct?

4 Is the 8MHz input to the 1772 correct? Check that it is available at IC6 pin 18. If not then trace it back to IC19 pin 8 and IC16 pin 7.

5 Is the 1772 DRQ line (IC6 pin 27) normally low but going high once every 32us (when then disc interface has been asked to read, say, a catalogue)? If not then check that this line is not shorted to power or ground and is connected to the IO Controller (IC22 pin 5).

6 Check that the DRQ transitions (IC6 pin 27) appear logically inverted at the NMI pin on the CPU (IC28 pin 6).

7 Check that the 1772 INTRQ output (IC6 pin 28) produces a high going pulse at the end of every command issued to the 1772. If the INTRQ line is shorted high it will cause the IO Controller to hold the CPU NMI line low, thus masking DRQ transitions.

6.6.3 The catalogue can be read, but the entries are corrupted.

1 Check that C10 is fitted and of the correct value between IC6 pin 27 to 0v.

2 Are one or two disc drives present? If two, make sure that only one of them has line termination resistors in.

6.6.4 The root catalogue can be read, but not the data (or the directory cannot be changed).

As 1,2 above

6.6.5 Data can be read but it is wrong (or you get Bad FS map in ADFS).

1 Try the disc drive in another computer. If the fault persists, then the disc drive is at fault.

2 As 1 above

3 There may be a fault in the memory system. Check that the address inputs to the Memory Controller (IC48 pins 21 to 28 inclusive) are switching with good logic levels. Check that the outputs; the MA lines are

switching. A good test here is to press BREAK repeatedly and look at each line in turn.

4 Check that the MA lines on IC48 are correctly connected to the address multiplexers, IC29 and IC33.

5 Use a memory test program to validate memory. This is rarely necessary as the memory chips are highly reliable.

6.6.6 Data can be read correcty but cannot be written reliably.

1 Is the disc formatted correctly?

2 Has the disc been write protected?

3 Check the disc drive on another computer if possible.

4 Check that data transitions are appearing on the 1772 WD and WG pins, IC6 pins 22 and 21. If not then check all connections to the 1772 (IC6) and the 74LS174 (IC1).

4 Follow the signal path of WD (IC6 pin 22) to the connector.

Note: a disc drive must be connected at this stage as pull-up resistors for the line driver outputs are within the disc drive. The output should be normally high with low going transitions.

5 Follow the signal path of WG (IC6 pin 21) to the connector.

Note: a disc drive must be connected at this stage as pull-up resistors for the line driver outputs are within the disc drive. The output should be normally high with low going transitions.

6.6.7 Data can be read and written correctly, but only one disc drive can be selected out of two.

1 Check all connections to the 74LS174 (IC1).

2 Check that only one drive select output is a logic LOW from the 7438, IC3 pins 3 and 6.

6.7 Parallel printer port

1 If the fault only shows up with a custom printer driver, test the software carefully first.

2 Check the printer with another computer if possible.

3 Check the computer with another printer if possible.

4 Check that pin 40 on the User VIA (IC7) has a pull up to +5V (R14) but is not short circuited to +5V.

5 Check that data appearing on Port A of the VIA (IC7 pins 2 to 9) appears on the outputs of the 74LS244 buffer (IC4).

6 Check that a strobe pulse appears on IC7 pin 39 for every character transmitted. If not then check all address, data and control p ins on the User VIA.

7 Check that a strobe pulse is found inverted at pin 11 of the 7438 (IC3) and true at pin 8 of the 7438 (IC3).

6.8 Expansion connector

1 Does the system work correctly without any peripherals fitted to the expansion connector? If not, check operation of the main computer before attempting to use such cartridges.

2 Check the external hardware VERY CAREFULLY. As the expansion port has direct connections to various system buses, strange faults can be simulated by external hardware.

3 Check the software VERY CAREFULLY. Similar comments apply to item 2.

4 Check that there are no shorts on the edge connector. The polarisation slot on the edge connector should avoid such problems, but if the external connector is mounted squint, such shorts could occur.

5 Is the external connector attached the correct way round? It may be possible to fit it in either of two positions.

6 Is the edge connector excessively worn, for example gold plating worn through?

6.9 Sound Output

6.9.1 Will not work at all.

1 Is the speaker connected?

2 Check that the speaker has not blowm.

6.9.2 Will not work with all envelopes

Check the software - if more than four envelopes are defined, envelopes 4-15 use serial buffer space.

6.9.3 Produces strange sounds

This is most likely to be a software problem, where the sound buffer is being accessed directly.

6.10 Econet

Econet can only be serviced properly by Econet service centres, who will have the necessary test equipment t check the system thoroughly. However, there are a few simple things which can be checked without the test equipment. Follow the Econet board circuit diagram in the Appendix.

1 Check that the two connectors on the Econet module are correctly inserted. The longer connector has two spare pins on the left of the PCB socket. If the module is displaced and is plugged into one or both of these spare pins, it will not work.

2 Check that the Econet module is installed and fitted correctly.

3 Check that NMI on the CPU pin 6 IC28 is not being held low.

6.11 Non Volatile Memory

1 Try a replacement PCD8572 IC24 (socketed)

2 Check the power supply to IC24, there should be 5v on pin 8, and 0v to pins 1 2 3 and 4.

3 Check for continuity between IC24 and IC25. Pin 6 IC24 should be connected to pin 15 IC25, and pin 5 IC24 should be connected to pin 14 IC25.

4 Check the operation of IC25, the system VIA, and change if necessary.

5 If all else fails, check the RC timing circuit formed by R1 and C2.

7 Hints and Tips

Please advise us at ACORN of any hints and tips that you feel would be suitable for inclusion here. Feedback from service personnel is particularly useful in this respect.

* Use the North end of C1 (in the Northwest corner) for a 0v oscilloscope ground.

* There is a large copper area to the Southwest of the PCB that looks like an earthplane. It is actually 5v - beware of this.

Appendix

Connector Pinouts

SKT8 video out
phono socket

outer: ground
inner: video

PL2 power input
power socket

outer: 0v
inner: +5v

SKT9 RGB
6 pin DIN

1 Red
2 Green
3 Blue
4 Sync
5 0v
6 +5v

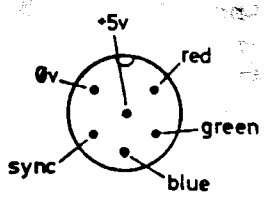

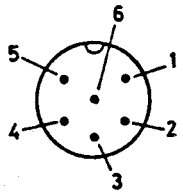

SKT7 RS232
5 pin 'domino' DIN

A Data in
B Data out
C 0v
D CTS
E RTS

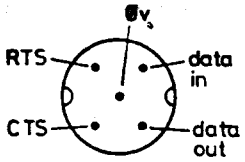

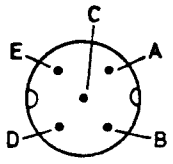

SKT6 ECONET
5-pin DIN 180

1 Data
2 0v
3 Clock
4 Data
5 Clock

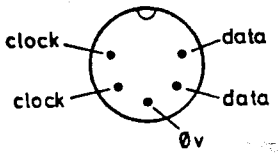

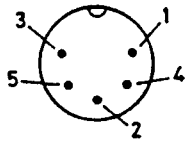

PL8 Joystick
9 way D-type plug

1 PB3	6 PB0
2 PB2	7 +5v
3 PB1	8 0v
4 PB4	9 CB2 (LPTSTB -
5 CB1	if connected)

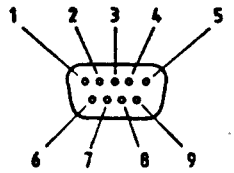

SKT1 Disc drive
25 way D-type socket

1 INDEX	9 not WRITE ENABLE
2 not S0	10 not TRACK 0
3 not S1	11 not WRITE PROTECT
4 not connected	12 not READ DATA
5 not MOTOR	13 not SIDE SELECT
6 not DIR	14
7 not STEP	to 0v
8 not WRITE DATA	25

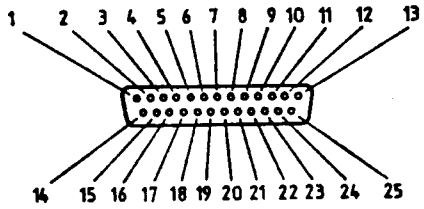

SK2 Printer
24 way Delta type D connector

1 STB	9 PD7
2 PD0	10 ACK
3 PD1	11 Not connected
4 PD2	12 Not connected
5 PD3	13
6 PD4	to 0v
7 PD5	24
8 PD6	

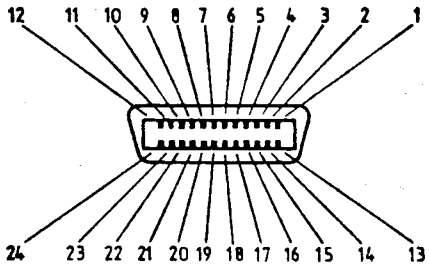

PL13 Expansion connector
25way double sided polarised edge connector

The information regarding connections to this port is contained within the main body of the manual.

Parts list

An asterisk in the final column indicates that the item is available as a spare part through the spares department of Acorn Computers Ltd.

ITEM	PART NO	DESCRIPTION	QTY	REMARKS	
1					
2					
3	0258,000	BARE PCB ISS.1	1		
4					
5					
6	0201,647	VIDEO PROCESSOR	1	IC16	*
7					
8	0201,847	IC MSI I/O CTRL CF30050	1	IC22	*
9					
10	2201,213	IC MSI MEM SW CF30058	1	IC48	*
11					
12	0201,845	IC MSI P.B.C. CF30049	1	IC26	*
13					
14	0201,846	IC MSI CRTC MUX CF30048	1	IC46	*
15					
16	0258,011	IC SYSTEM ROM	1	IC49 (SOCKET)	*
17					
18					
19					
20	0502,100	RES 10R C/MF 5% 0W25	1	R5	
21					
22	0502,101	RES 100R C/MF 5% 0W25	3	R27,38,44	
23					
24	0502.102	RES 1K0 C/MF 5% 0W25	4	R28,45,52,55	
25					
26	0502,103	RES 10K C/MF 5% 0W25	9	R19-26,67	
27					
28	0502,123	RES 12K C/MF 5% 0W25	2	R1,3	
29					
30	0502,151	RES 150R C/MF 5% 0W25	5	R9-12,34	
31					
32	0502,152	RES 1K5 C/MF 5% 0W25	6	R29-31,47,49,54	
33					
34	0502,221	RES 220R C/MF 5% 0W25	3	R36,40,50	
35					
36	0502,222	RES 2K2 C/MF 5% 0W25	6	R14,15,17,48,53,56	
37					
38	0502,273	RES 27K C/MF 5% 0W25	4	R2,8,32,35	
39					
40	0502,330	RES 33R C/MF 5% 0W25	3	R41-43	
41					
42	0502,331	RES 330R C/MF 5% 0W25	3	R33,46,57	
43					
44	0502,392	RES 3K9 C/MF 5% 0W25	2	R13,51	
45					
46					
47					
48	0502,680	RES 68R C/MF 5% 0W25	8	R37,39,61-66	
49					
50	0502,683	RES 68K C/MF 5% 0W25	1	R4	

0502,820	RES 82R C/MF 5% 0W25	3	R58-60	
0622,220	CPCTR ALEC 22u 16V AX	7	C1,8,19-21,25,32	
0621,470	CPCTR ALEC 47u 10V AX	1	C6	
0629,010	CPCTR CPLT 10n 30V 80%	1	C29	
0630,100	CPCTR CPLT 1n0 30V 10%	1	C4	
0630,220	CPCTR CPLT 2n2 30V 10%	2	C2,5	
0631,010	CPCTR CPLT 10p 30V 2%	1	C27	
0631,022	CPCTR CPLT 22p 30V 2%	2	C13,18	
0631,033	CPCTR CPLT 33p 30V 2%	1	C26	
0631,047	CPCTR CPLT 47p 30V 2%	2	C24,30	
0631,100	CPCTR CPLT 100p 30V 2%	1	C17	
0631,220	CPCTR CPLT 220p 30V 2%	2	C10,23	
0635,470	CPCTR ALEC 47u 16V RAD	1	C16	
0680,004	CPCTR DCPLR 47n 20% 0.2"P	4	C3,7,15,31	
0680,101	CPCTR DCPLR 100n AX 25V	43	A	
0701,772	IC WD1772 FDC 5.25"	1	IC6	*
0702,220	IC PCD8572 NV MEM	1	IC24 (SOCKET)	*
0704,105	IC 4464 DRAM 120nS 64Kx4	4	IC35,36,41,47	*
0705,050	IC SAA 5050 CHTR GEN	1	IC15	*
0706,489	IC 76489 SOUND GEN	1	IC30	*
0706,512	IC 65SC12 CPU CMOS 2MHz	1	IC28	*
0706,522	IC 6522 VIA NMOS 1MHz	2	IC7,25	*
0706,524	IC 6522 VIA CMOS 1MHz		OPTION	
0706,845	IC 6845 CRTC NMOS 1MHz	1	IC34	*

107					
108	0740,006	IC 7406 TTL 14/0,3"	1	IC2	
	0740,016	IC 7416 TTL 14/0.3"		OPTION	*
110					
111	0740,038	IC 7438 TTL 14/0,3"	1	IC3	*
112					
113	0741,004	IC 74S04 TTL 14/0.3"	1	IC10	*
114					
115	0748,074	IC 74F74 TTL 14/0.3"	1	IC8	*
116					
117					
118	0742,000	IC 74LS00 TTL 14/0,3"	1	IC18	*
	0744,000	IC 74ALS00 TTL 14/0,3"		OPTION	
120					
121	0742,002	IC 74LS02 TTL 14/0,3"	1	IC21	*
122					
123	0742,014	IC 74LS14 TTL 14/0,3"	1	IC19	*
124					
125	0742,086	IC 74LS86 TTL 14/0,3"	1	IC20	*
	0744,086	IC 74ALS86 TTL 14/0,3"		OPTION	
127					
128	0742,139	IC 74LS139 TTL 16/0.3"	1	IC12	*
	0749,139	IC 74HCT139 CMOS 16/0.3"		OPTION	
130					
131	0742,156	IC 74LS156 TTL	2	IC32,44	*
132					
133	0742,163	IC 74LS163 TTL 16/0.3"	1	IC43	*
	0744,163	IC 74ALS163 TTL 16/0.3"		OPTION	
135					
136	0742,174	IC 74LS174 TTL 16/0,3"	1	IC1	*
137					
138	0742,244	IC 74LS244 TTL 20/0,3"	1	IC4	*
139					
140					
141	0742,251	IC 74LS251 TTL 16/0.3"	1	IC33	*
	0749,251	IC 74HCT251 CMOS 16/0.3"		OPTION	
143					
144	0742,257	IC 74LS257 TTL 16/0,3"	1	IC37	*
	0744,257	IC 74ALS257 TTL 16/0.3"		OPTION	
146					
147	0742,259	IC 74LS259 TTL 16/0,3"	1	IC31	*
148	0744,259	IC 74ALS259 TTL 16/0,3"		OPTION	
149					
150	0742,373	IC 74LS373 TTL 20/0,3"	1	IC11	*
	0744,373	IC 74ALS373 TTL 20/0,3"		OPTION	
152					
153	0747,030	IC 74HC30 CMOS 14/0.3"	1	IC45	*
154					
155	0748,000	IC 74F00 TTL 14/0.3"	1	IC27	*
156					
157					
158	0749,253	IC 74HCT253 CMOS 16/0.3"	2	IC39,40	*
159					
160	0770,386	IC LM386 AUDIO AMP	1	IC42	*
161					
162	0780,239	TRANS BC239 NPN	3	Q1,2,3	*

163					
164	0780,309	TRANS BC309 PNP	1	Q4	*
165					
166					
167	0794,148	DIODE SI 1N4148	1	D1	*
168					
169					
170					
171	0800,001	CONR 5W SKT DIN RA DOM	1	SKT7	*
172					
173	0800,002	CONR 6W SKT DIN RA PCB	1	SKT9	*
174					
175	0800,004	CONR 5W SKT DIN RA PCB	1	SKT6	*
176					
177					
178	0800,050	CONR 2W WAFR 0.1" ST PCB	1	PL1	*
179					
180	0800,051	CONR 3W WAFR 0.1" ST PCB	2	PL11,12	*
181					
182	0800,070	CONR 2W SHUNT 0.1"	2	PL11,12	*
183					
184	0800,108	SKT IC 8/0.3" NORM	1	IC24	
185					
186	0800,116	SKT IC 16/0.3" NORM	2	IC5,9	
187					
188	0800,124	SKT IC 24/0.6" NORM	1	IC13	
189					
190	0800,128	SKT IC 28/0.6" NORM	6	IC14,17,23,29,38,49	
191					
192	0800,481	CONR 5W SKT HSNG 0.1" PCB	1	SKT5	*
193					
194	0800,484	CONR 17W SKT HSNG .1" PCB	1	SKT4	*
195					
196	0800,300	CONR 25W SKT "D" RA E2.54	1	SKT1	*
197					
198	0800,313	CONR 9W PLG "D" RA E2.54	1	PL8	*
199					
200	0800,365	CONR 24W SKT DELTA RA PCB	1	SKT2	*
201					
202	0800,611	PHONO SOCKET RA PCB	1	SKT8	*
203					
204	0801,300	CONR 26W PLG 2ROW 2.5mm	1	PL6	*
205					
206					
207					
208	0801,001	CONR PWR SKT 2mm CTR PIN	1	PL2	*
209					
210					
211	0820,160	XTAL 16.000MHz HC18/U	1	XL1	*
212					
213					
214					
215					
216					
217	0882,124	SCW M3x12 PAN HD POSI (FOR ITEMS 196,198 & 200)	6		

218				
219	0882,902	NUT M3 STL FULL Z/PASS	6	USE WITH ITEM 217
220				
221	0882,972	WSHR M3 SPRF IT STL	6	USE WITH ITEM 217
222				
223	0882,985	WSHR M3 PLN NYLON WITH ITEM 217 (PL8 EAST)	1	

The following items are also available, but are not mounted on the printed circuit board.

0201,248	EXPANSION CONNECTOR COVER	1	
0158,0001/T	KEYBOARD PCB ASSEMBLY	1	
0258,001	CASE UPPER	1	) AVAILABLE AS SET ONLY
0258,002	CASE LOWER	1	)
0258,003	REAR LABEL	1	)
0258,004	TOP LABEL	1	) AVAILABLE AS SET ONLY
0258,005	BOTTOM LABEL	1	)
0258,007	POLY TOP SHELL	1	) AVAILABLE AS SET ONLY
0258,008	POLY BOTTOM SHELL	1	)
0258,009	OUTER CARTON	1	
0258,010	WELCOME/UTIL DISC	1	
0458,000	WELCOME GUIDE	1	
0458,001	LOGOTRON LOGO BOOK	1	
2201,138	VIEW REFERENCE GUIDE	1	
0458,012	VIEW + ABC KEYCARD	1	
0800,080	CONR TERM CRIMP 4809C	2	SPEAKER CONNECTOR
0800,082	CONR 2W SKT HSNG 0.1"	1	SPEAKER CONNECTOR
0835,001	LSPKR 16R 0.2W 40mmD	1	SPEAKER
0890,001	FOOT SO RUBR 12,7Dx3.5mmH	4	
TBA	KEYTOP SET	1	
TBA	RED KEYBOARD LED	3	
TBA	KEYBOARD RIBBON CABLE	1	

British Broadcasting Corporation

Master Series

Compact Microcomputer

Service Manual

Monitor Stand Section

ACORN COMPUTERS LTD.

MASTER COMPACT MONITOR STAND SERVICE GUIDE

SECTION 1 SERVICE INSTRUCTIONS
SECTION 2 DISC UPGRADE INSTRUCTIONS

This manual is intended to provide information for service engineers and ACORN dealers who will be servicing the Master Compact Computer. No part of this manual is to be copied or communicated to persons other than those engaged upon service work for or on behalf of ACORN Computers.

WARNING: DANGEROUS VOLTAGES EXIST INSIDE THE CASE OF THE MONITOR-STAND, QUALIFIED PERSONNEL ONLY SHOULD ATTEMPT TO REPLACE PARTS/COMPONENTS IN THE MONITOR-STAND ENCLOSURE(S).

IMPORTANT: THE MONITOR-STAND MUST BE EARTHED

Any service work involving components, wiring and assemblies associated with hazardous voltages or safety earth connections should only be undertaken by suitably qualified service personnel. On completion of such work and to ensure product safety is in no way degraded, the unit should be subjected to the appropriate safety test(s) before being returned to the customer, namely:

Earth Continuity *- A current derived from an AC source with no-load voltage not exceeding 12v, shall be passed through the earth conductor of the power supply cord to all accessible metal parts intended to be earthed. The measured resistance shall not exceed 0.1 Ohms (Excluding the resistance of the supply cord).*

Insulation Withstand test *- A test voltage of 1.5Kv A.C. (or 2.1Kv D.C.) shall be applied between Live and Neutral pins of the supply cord connected together and the earth pin by means of a suitable insulation tester (E G AVO Type RM 215-L/2 or similar) for a minimum of ten seconds. The unit shall show no flash-over or breakdown during the test.*

NOTE: As the requirements of some customers may differ from the BS Standard, some Monitor Stands may be fitted with a metal screen (held in place by four fixing screws) around the Power Supply. This screen must be re-fitted if the Power Supply is replaced.

This manual will be subject to change from time to time, no responsibility can be accepted for any errors and/or omissions. ACORN COMPUTERS Ltd. can accept no responsibility for any loss or damage resulting from use of the information contained herein - this does not affect your statutory rights in any way.

Introduction

As there are no serviceable parts inside the Monitor-Stand, a "first -line" level of servicing only is possible. Basically this means that faulty cables and parts should be replaced rather than repaired. Under **NO** circumstances should Users or Dealers attempt to fault-find on the power supply.

Failure to comply with these recommendations will invalidate the warranty and could put users of the equipment at risk.

Dismantling The Monitor-Stand

Turn the Mains switch to the 'OFF' (0) position and unplug the mains lead from the mains wall-socket and then from the mains socket on the Monitor-Stand. Remove the +5 Volt lead from the Keyboard/Processor unit. Also disconnect the Disc-Drive Data cable from the Keyboard/Processor unit.

DO NOT DISMANTLE THE MONITOR-STAND WITH THE MAINS LEAD PLUGGED-IN. EVEN WITH THE MAINS SWITCH IN THE O ('OFF') POSITION THERE ARE STILL DANGEROUS VOLTAGES PRESENT.

Referring to figure 1 below, lay the Monitor-Stand on a flat even surface with the front of the unit facing towards you. Placing your thumbs on the underside of the unit and your fingertips along the top, pull the plastic front panel towards you and at the same time downwards and away from the unit. Once the front panel is removed, turn the unit around and remove the back panel in the same way. The side panels will now pull-off the unit using the same technique.

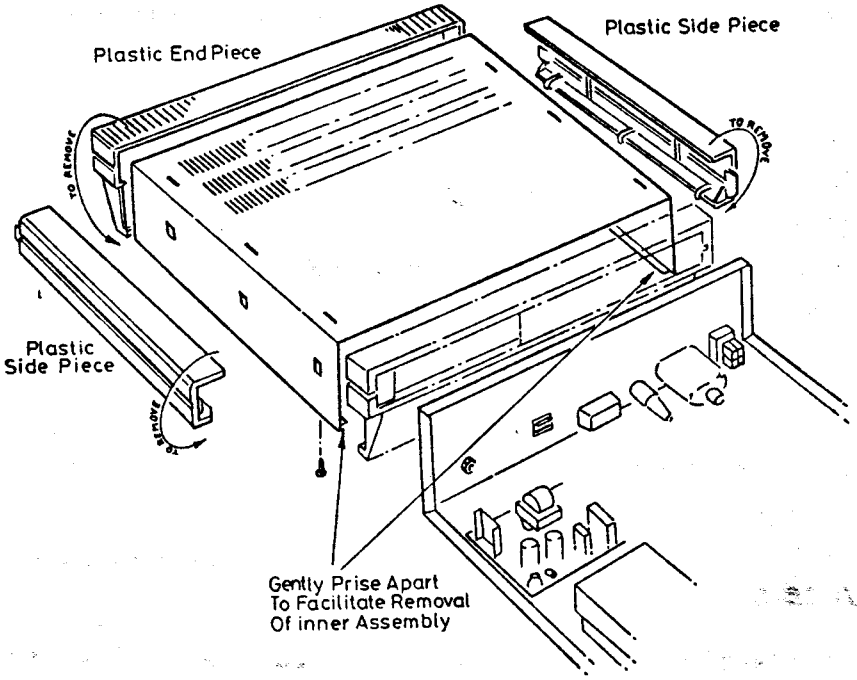

Fig 1

Having removed the front and side panels as described above, turn the unit over and undo the outermost screws on the underside of the case. (There may be four or six screws depending on the model you have). Remove the screws and washers and put them in a safe place until required again. Turn the Monitor-Stand over (the right-way up) with the front of the unit facing towards you. Slide the top backwards and pull the main unit clear, taking care not to damage the Disc Drive Data cable or the +5 Volt power cable. NOTE: It may be necessary to push the side panels of the top apart slightly to allow the main unit to slide clear.

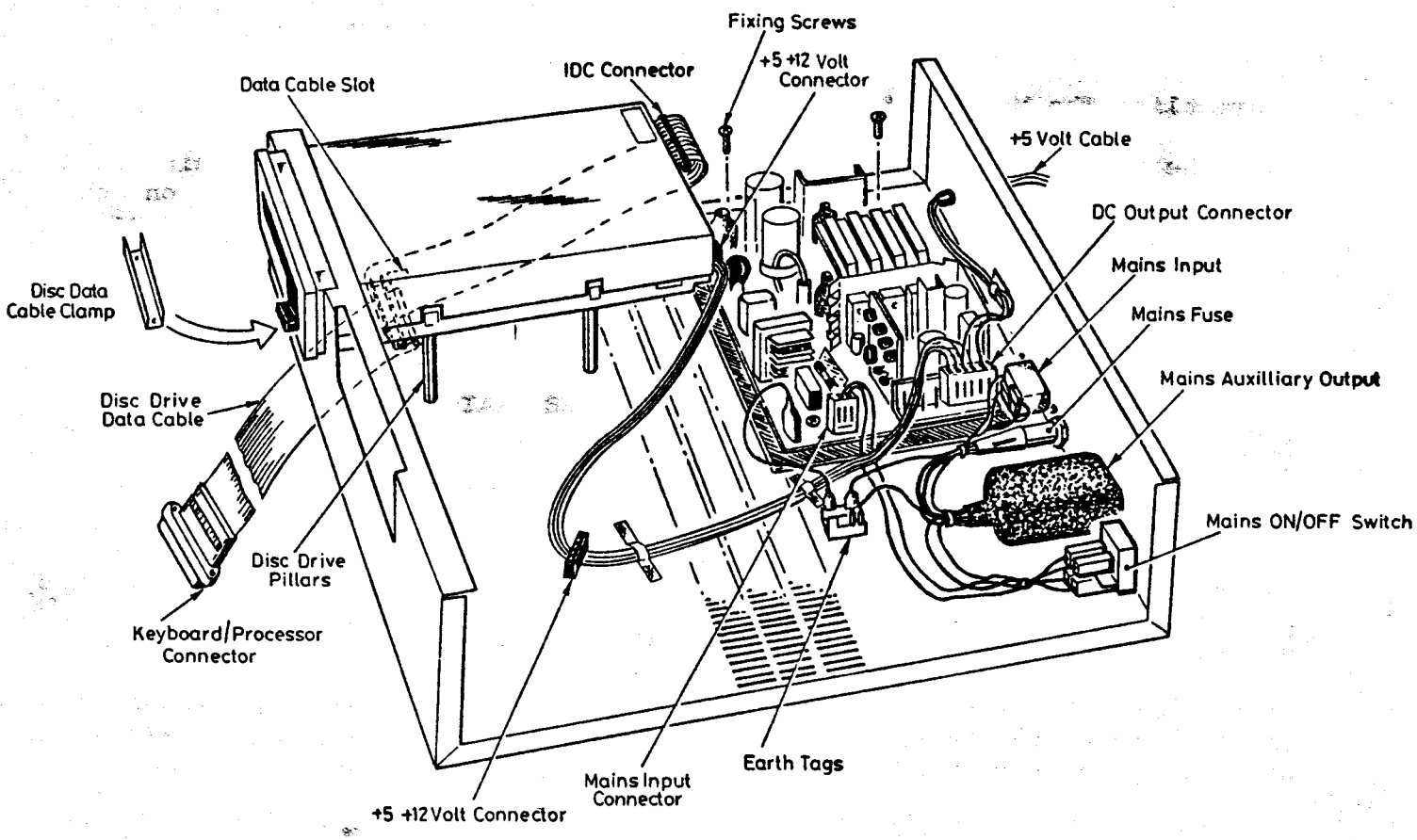

Fig 2

The Mains Power Lead

The Mains Lead supplied with the Monitor Stand has a moulded 13A plug-top at one end and a moulded socket connector at the other. The 5A fuse in the plug-top should be checked for continuity and replaced if found to be faulty. Also check the Mains Lead for continuity and replace if faulty.

The Mains On/Off Switch

Figure 3 shows how the Mains On/Off Switch can be removed for replacement. Note: ensure the push-on connections are re-made as shown in figure 3.
(Only replace components with Acorn approved spares).

The Mains Auxiliary Output

The Mains Auxiliary Output connector can be located and dismantled as shown in figure 3, all wiring should be re-made to match the colour code given.

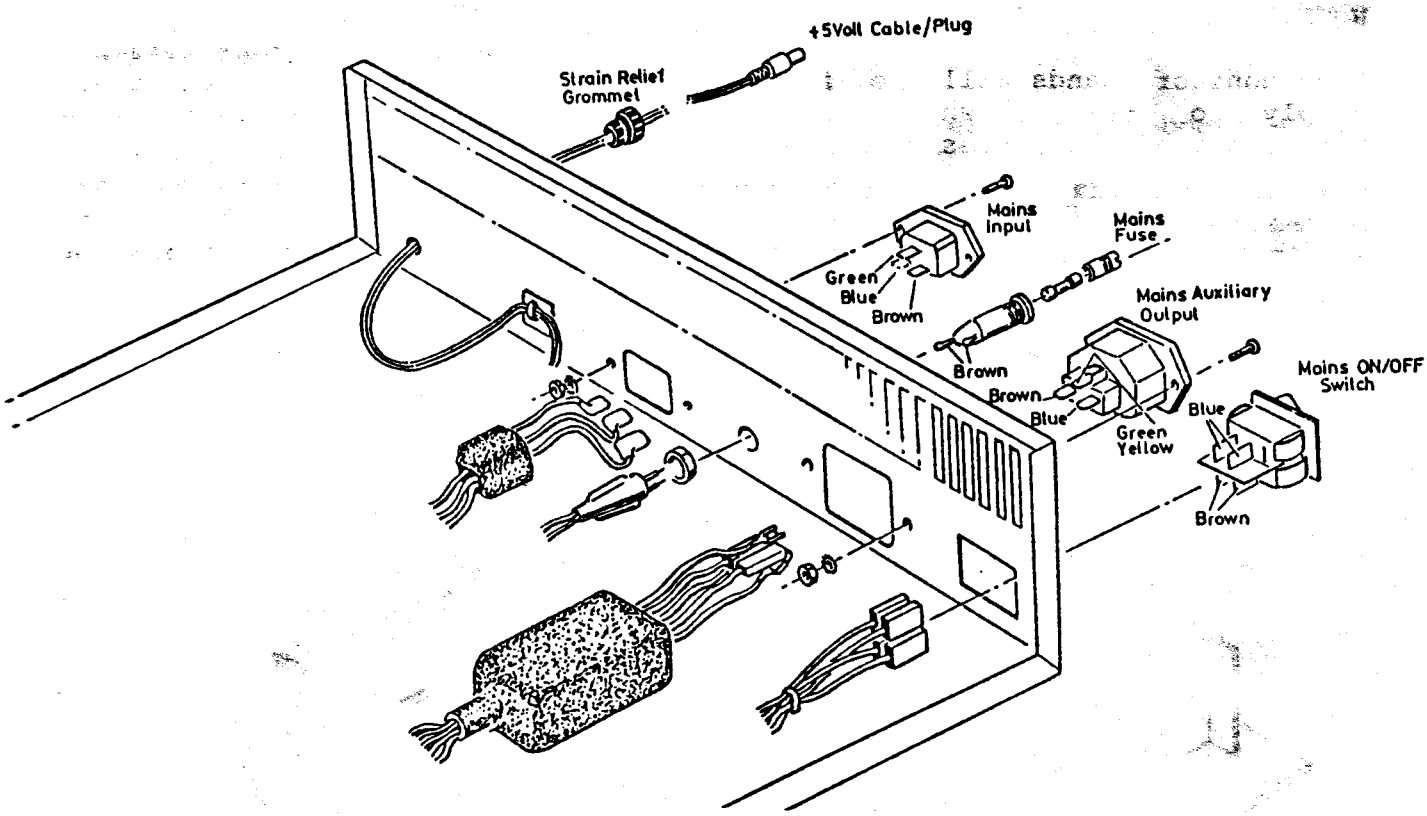

FIGURE 3

The Mains Fuse

The Monitor-Stand Mains Fuse is situated on the back of the unit as shown above. If faulty replace **only** with a fuse of the correct rating:

Anti-surge 3.15A HBC 250v a.c. (e.g. Type T)

The Mains Input

The Mains Input connector can be dismantled and changed as shown in figure 3 above, again, make sure that all wiring is checked carefully against the diagram.

NOTE: Some Monitor Stands (depending on the Model) will have the the Mains Input/Output connectors fixed to the unit with rivets rather than screws and washers.

Changing the Power Supply

Refer to figure 2 above. Undo the four fixing screws on the top of the PCB. Unplug the Mains input connector, the DC output connector and the Earth Tag. Lift the PCB free and fit the replacement. **Note:** Ensure that the PCB is secured properly and that all of the connectors are re-seated firmly in their sockets.

NOTE:

Some Monitor Stands will be fitted with a different type of power supply to that shown in Figure 2. Although the voltages are the same the layout of the cables differ as shown below.

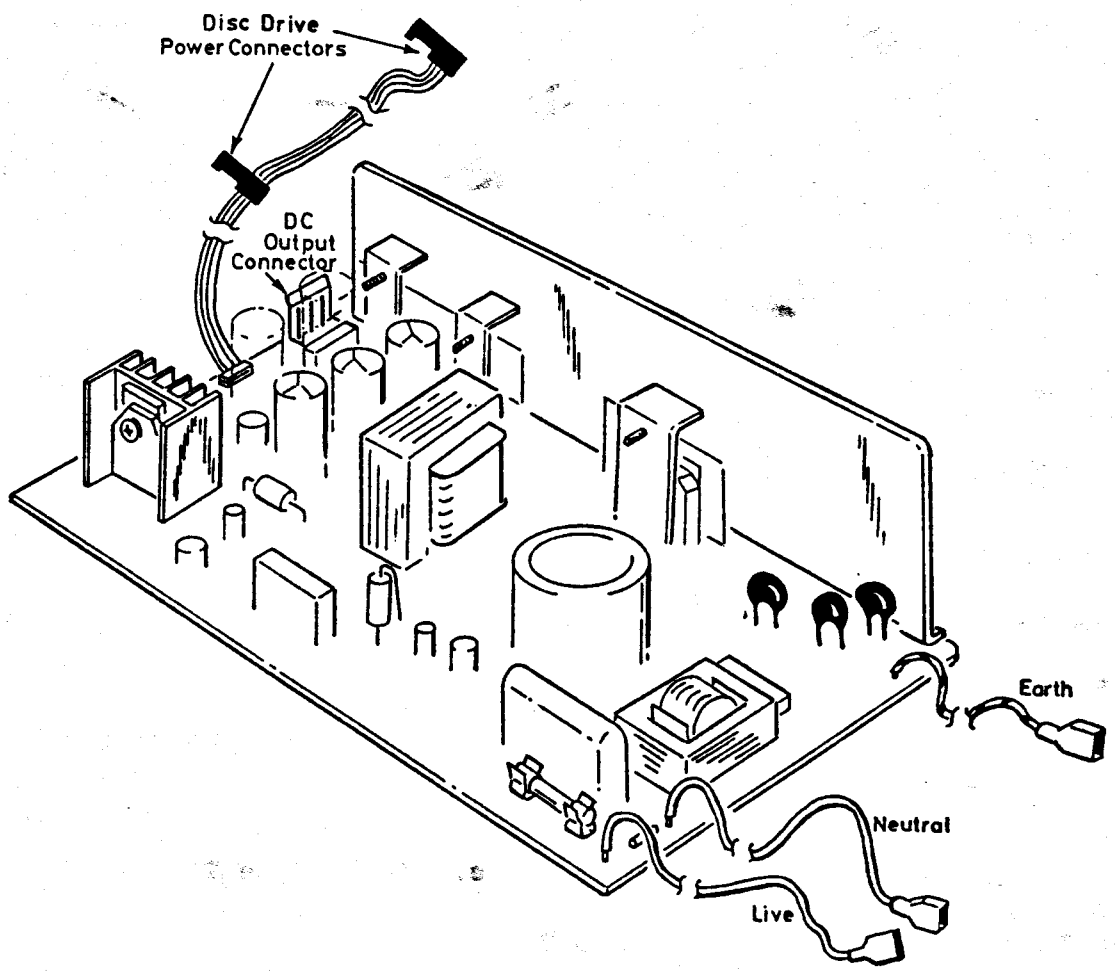

+5 Volt Supply Cable

This lead supplies +5 Volts to the keyboard/processor unit and is part of the DC Power Cable. How to replace this is described below.

Checking/Replacing the DC Power Cable

Unplug the DC output connector from the power supply board. The continuity of the +5 volt lead can be checked from the plug to the pins in the connector using the pin-out diagram of the connector shown in figure 4 below. If the +5 Volt cable is found to be open-circuit then proceed as described. Note: At full load-current conditions the cable should give a resistance reading of less than 100 milli-Ohms for each wire.

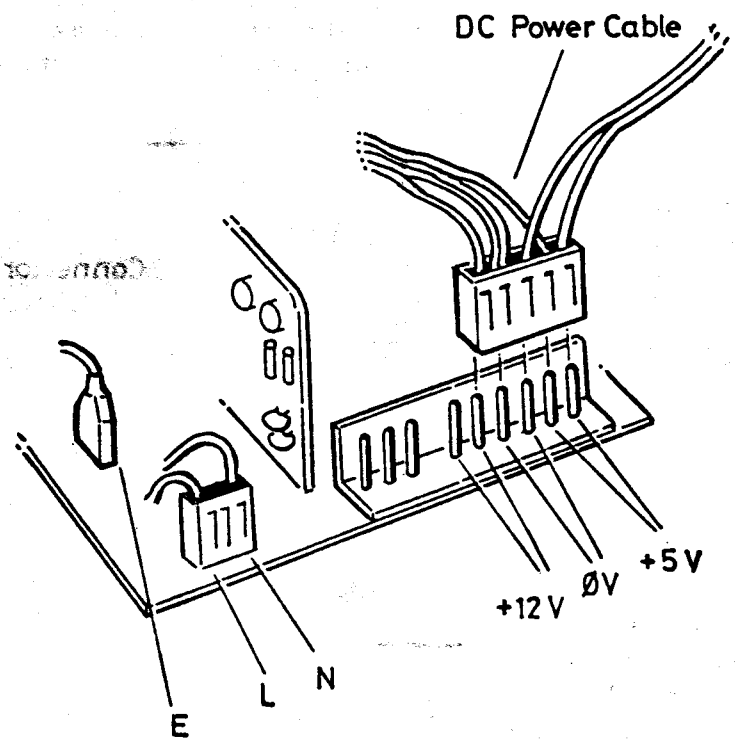

Figure 4

As the + 5 Volt cable is part of the Low voltage DC output Cable Assembly, the entire assembly must be replaced. This cableform also carries the +5/12 Volt supply to the Disc Drive(s) on the connectors shown in figure 2 above. Having already unplugged the DC output connector from the power supply, unplug the +5/12 Volt connector from the Disc Drive(s). Note that the +5 Volt power cable goes through the back panel via a strain-relief grommet, this can be pushed out of the back panel from inside the unit using a grommet insertion/extraction tool. Once the strain-relief grommet is clear of the back panel, pull the +5 Volt cable into the unit. It is now possible to lift the cableform out of the unit and replace with a spare (available from Acorn Computers) by reversing the above procedures.

The Disc Drive Data Cable

If Disc errors are continually occurring this may be due to a fault on the Disc Drive Data Cable. The quickest way to determine whether the cable is faulty or not is to try a known-working replacement. Replace the Disc Drive Cable as follows, referring to figures 2 and 5 as necessary.

Carefully turn the unit onto its side, undo the screws holding the cable clamp in position and lift it free. Unplug the IDC connector from the Disc Drive and untwist the cable so that it is flat all the way along. Carefully pull the cable from outside the unit and thread the IDC connector through the slot in the base of the unit, pulling the cable free.

Feed the new Data Cable through the slot on the underside of the unit ensuring it is flat all the way along and that the Keyboard/Processor connector is correctly oriented. Twist the Data cable over as shown below in order to correctly orientate the IDC connector for connection to the Disc Drive.

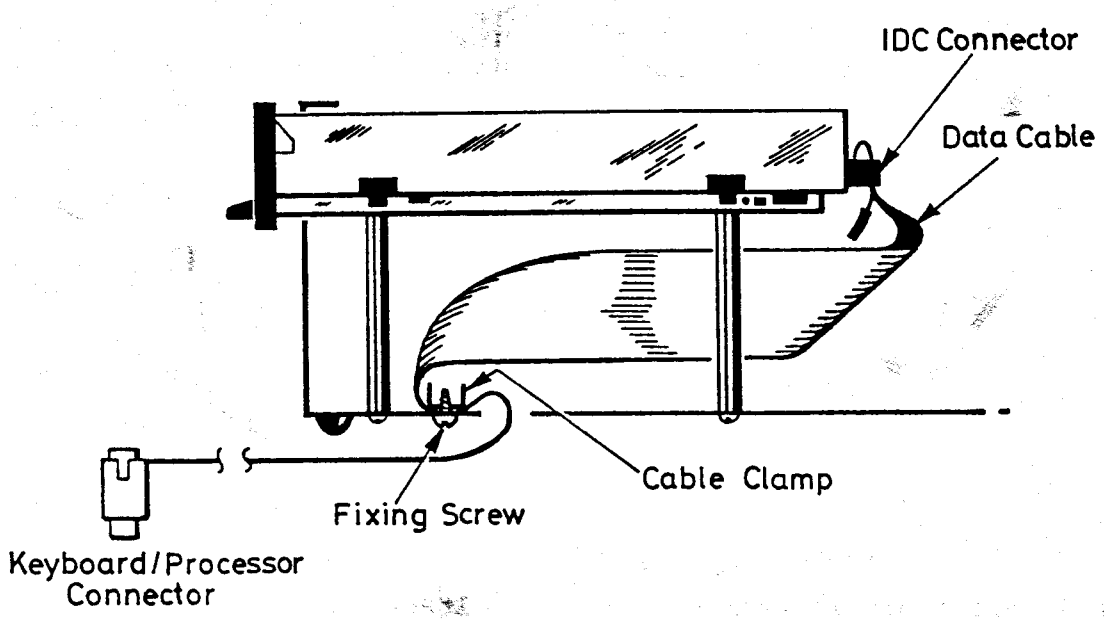

Figure 5

Note: Ensure that the data cable clamp is re-fitted on the cable as shown, in order to prevent the cable from snaring on the underside of the Disc Drive. (Insert the screws into the clamp from the underside of the unit).

Changing the Disc Drive

Unplug the IDC connector and the +5/+12 Volt connector from the Disc Drive. Turn the unit onto its side and undo the four screws holding the Disc Drive support pillars (take care not to drop the disc drive). Lift the drive out of the unit and unscrew the four support pillars from the drive. Screw the pillars into the new drive taking care not to over-tighten them. Before fitting the new Drive it has to be configured as "Drive 0" so that the computer recognises it. Do this by positioning the switch on the side of the Drive as shown in figure 6 below. Note: If the drive type you are fitting is not as described here (SONY F6 3W) then refer to the Drive Setting instructions in the Acorn Dealer Information Manual.

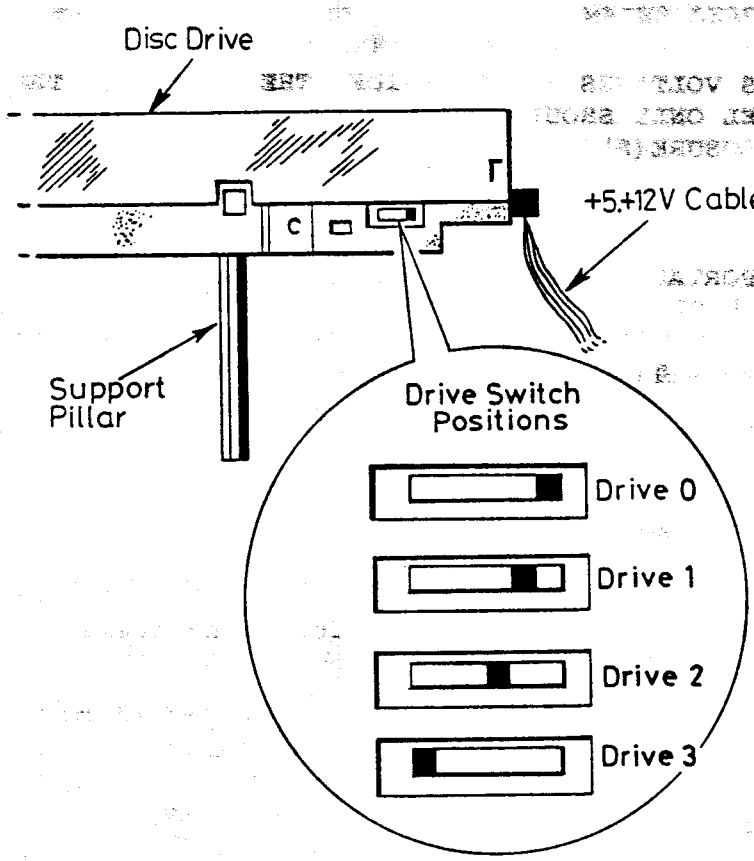

Figure 6

Replace the fixing screws and washers in the base of the Monitor stand fixing the new Drive in place. Re-connect the + 5/12 Volt power connector and the Data Cable IDC connector.

Re-assemble the unit by reversing the dismantling procedure described above. Note: ensure that when the top case is re-fitted the ventilation slots are at the **back** of the unit.

A full functional test of the equipment should be carried-out (including the safety tests described at the beginning of this section) before returning the equipment to the customer.

DISC UPGRADE INSTRUCTIONS

Introduction

These instructions are intended to provide information for service engineers and ACORN dealers who will be servicing the Master Compact Computer. No part of these instructions are to be copied or communicated to persons other than those engaged upon service work for or on behalf of ACORN Computers.

WARNING: DANGEROUS VOLTAGES EXIST INSIDE THE CASE OF THE MONITOR-STAND, QUALIFIED PERSONNEL ONLY SHOULD ATTEMPT TO REPLACE PARTS/COMPONENTS IN THE MONITOR-STAND ENCLOSURE(S).

IMPORTANT: THE MONITOR-STAND MUST BE EARTHED

These instructions will be subject to change from time to time, no responsibility can be accepted for any errors and/or omissions. ACORN COMPUTERS Ltd. can accept no responsibility for any loss or damage resulting from use of the information contained herein - this does not affect your statutory rights in any way.

The Disc Upgrade kit should include the following items:

4 Drive Support Pillars

1 Double Drive Data Cable

1 3.5" DS Disc Drive

4 M3 Pan-Head Screws

8 M3 Shakeproof Washers

1 12 Month Guarantee Card

1 Fitting Instructions

Dismantling The Monitor-Stand

Turn the Mains switch to the 'OFF' (0) position and unplug the mains lead from the mains wall-socket and then from the mains socket on the Monitor-Stand. Remove the +5 Volt lead from the Keyboard/Processor unit. Also disconnect the Disc-Drive Data cable from the Keyboard/Processor unit.

DO NOT DISMANTLE THE MONITOR-STAND WITH THE MAINS LEAD PLUGGED-IN. EVEN WITH THE MAINS SWITCH IN THE O ('OFF') POSITION THERE ARE STILL DANGEROUS VOLTAGES PRESENT.

Referring to figure 1 below, lay the Monitor-Stand on a flat even surface with the front of the unit facing towards you. Placing your thumbs on the underside of the unit and your fingertips along the top, pull the plastic front panel towards you and at the same time downwards and away from the unit. Once the front panel is removed, turn the unit around and remove the back panel in the same way. The side panels will now pull-off the unit using the same technique.

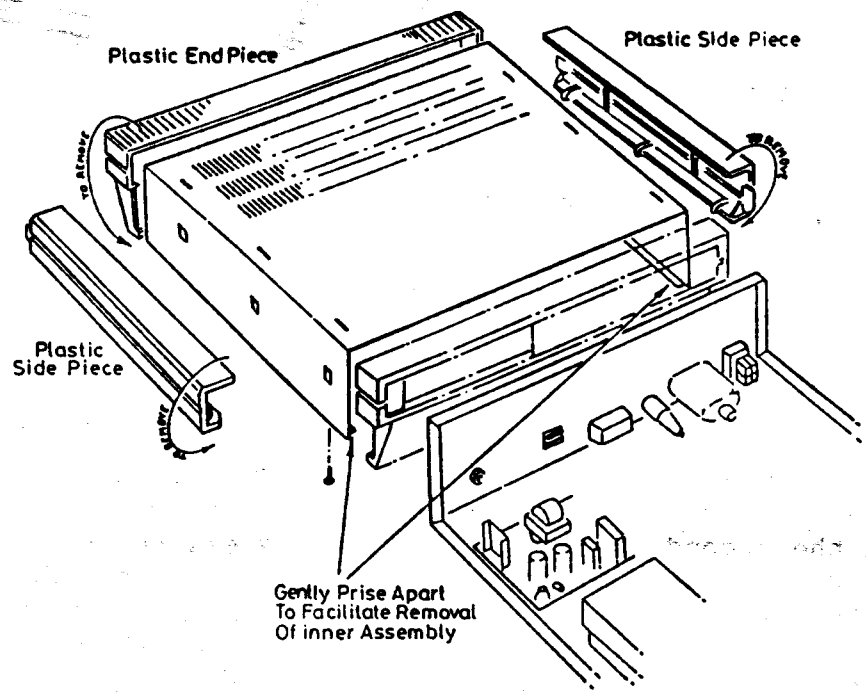

Figure 1

Having removed the front and side panels as described above, turn the unit over and undo the outermost screws on the underside of the case. (There may be four or six screws depending on the model you have). Remove the screws and washers and put them in a safe place until required again. Turn the Monitor-Stand over (the right-way up) with the front of the unit facing towards you. Slide the top backwards and pull the main unit clear, taking care not to damage the Disc Drive Data cable or the +5 Volt power cable. NOTE: It may be necessary to push the side panels of the top apart slightly to allow the main unit to slide clear.

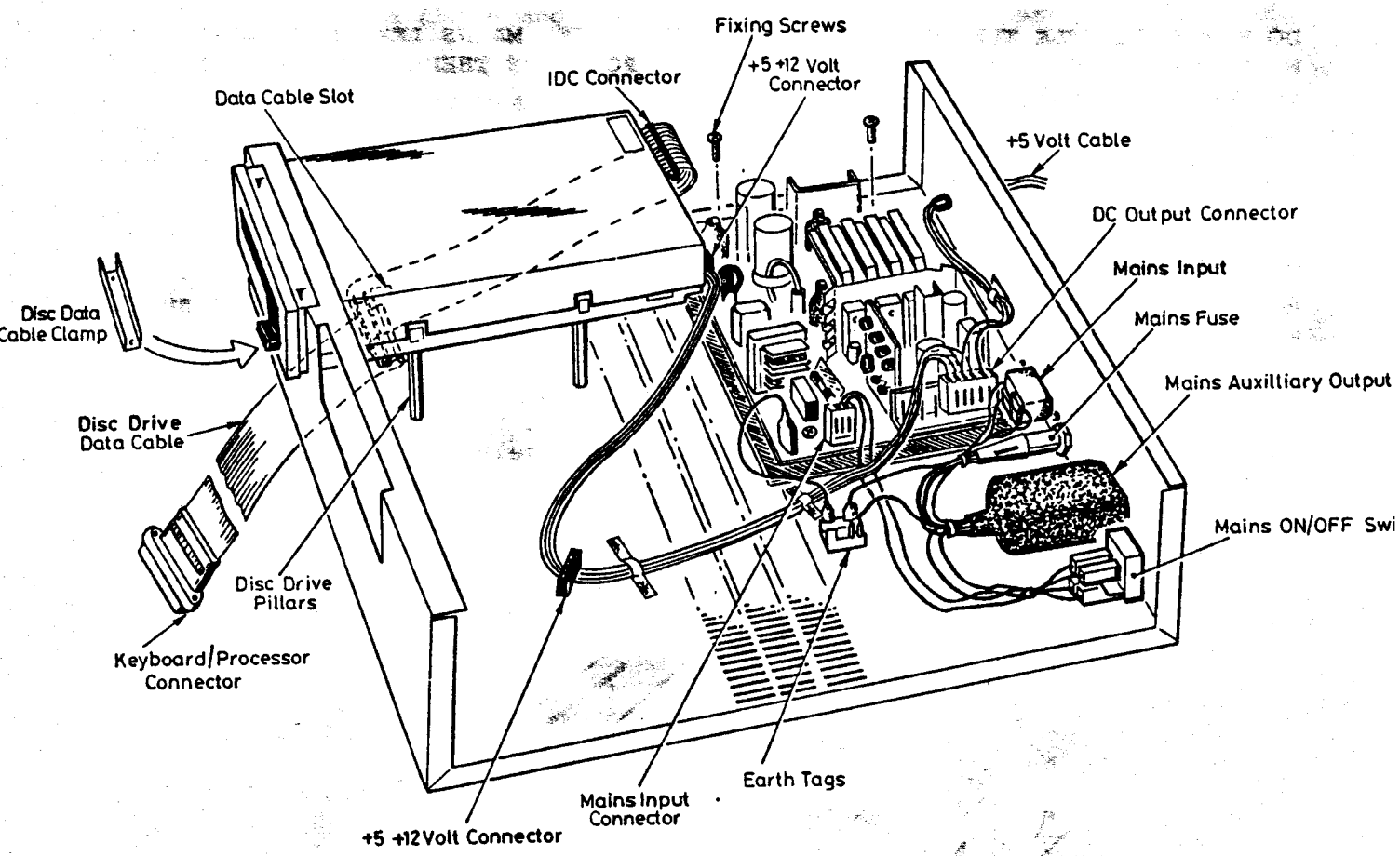

Fig 2

Before fitting the second Disc Drive it is necessary to remove the existing Disc Drive Data Cable and fit a dual Disc Drive cable for connection to the second drive.

Carefully turn the unit onto its side, undo the screws holding the cable clamp in position and lift it free. Unplug the IDC connector from the Disc Drive and untwist the cable so that it is flat all the way along. Carefully pull the cable from outside the unit and thread the IDC connector through the slot in the base of the unit, pulling the cable free.

Install the Dual Drive Data Cable along the same path used for the single drive cable just removed. When the new data cable is inserted and pulled through the slot in the base of the unit, it must be twisted over in order to correctly orientate the IDC connectors for connection to the Disc Drives. (Refer to Figure 3 below).

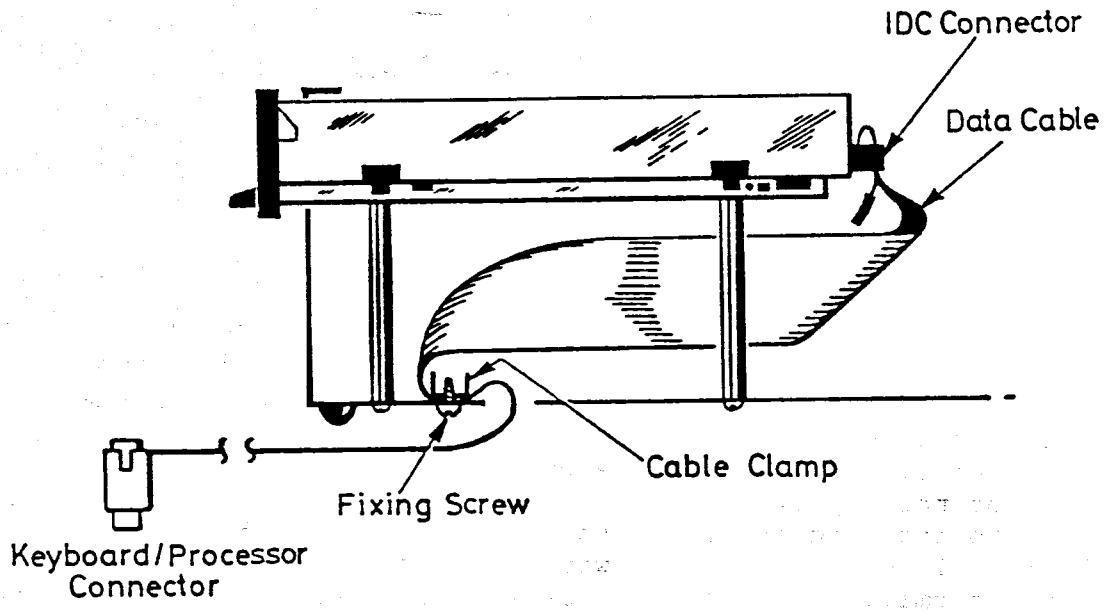

Figure 3

Note: Ensure that the data cable clamp is re-fitted on the cable as shown above, in order to prevent the cable from snaring on the underside of the Disc Drive. (Insert the screws into the clamp from the underside of the unit).

To hold the Data Cable in place plug in the IDC connector to Drive 0 (the existing Disc Drive). Note that the IDC connector is polarised and will only fit onto the Drive the correct way-round, therefore it should not be forced onto the connector.

Before fitting the new Disc Drive it has to be configured as "Drive 1" so that the computer recognises it. Do this by positioning the switch on the side of the drive as shown in figure 4 below. If the drive type you are fitting is not the same as the one described here (SONY F6 3W) then refer to the Drive setting instructions in the Acorn Dealer Information Manual.

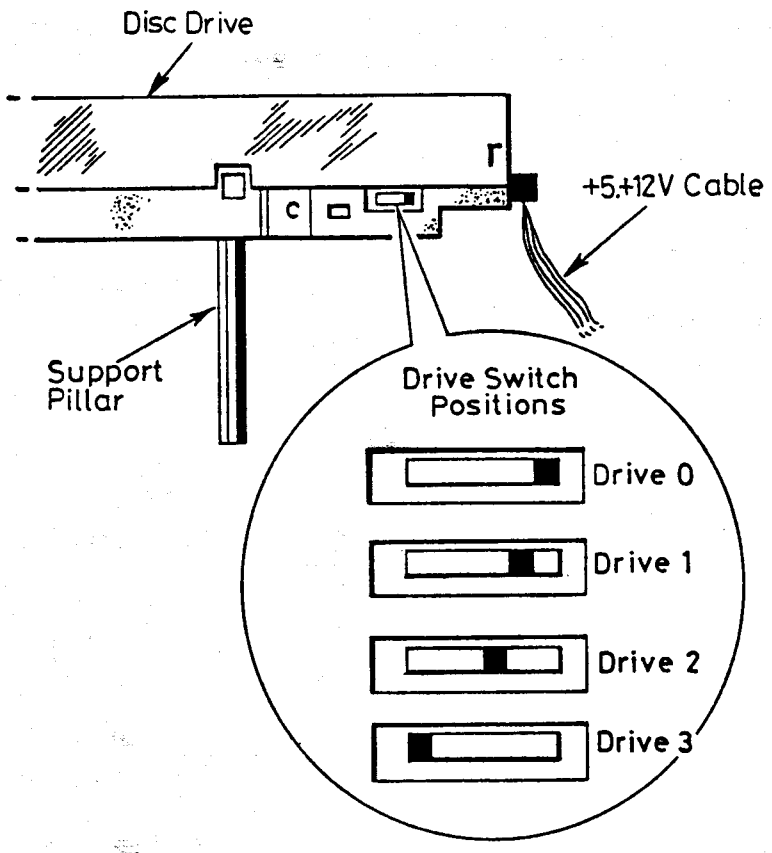

FIGURE 4

Take the new Disc Drive and fit the support pillars and washers provided in the the upgrade kit onto it. (Take care not to over-tighten them). Fit the second disc drive in place ensuring the power cable isn't trapped behind one of the support pillars. Holding the Disc Drive and case turn the unit onto its side and align the holes on the case with the threads on the pillars. Insert the screws with shakeproof washers into the pillars and tighten firmly. Turn the unit back onto its base and connect the power and Data cables to drive 1. (The Disc drive you have just installed in the unit).

Re-assemble the unit by reversing the dismantling instructions given above. Note: ensure that when the top case is re-fitted the ventilation slots are at the **back** of the unit.

Now that the upgrade has been completed it is advisable to do a functional test of the new disc drive. For example, check that Discs can be formatted, and also that the drive will write to and read from discs without errors.
Note: If necessary contact your nearest ACORN dealer for advice.

Acorn Computers Limited
Fulbourn Road
Cherry Hinton
Cambridge CB1 4JN
England
Issue 1 September 1986

A0 | DRG. No. 0158,000/C | FIRST USED ON | THIRD ANGLE PROJECTION | IF IN DOUBT ASK | DO NOT SCALE

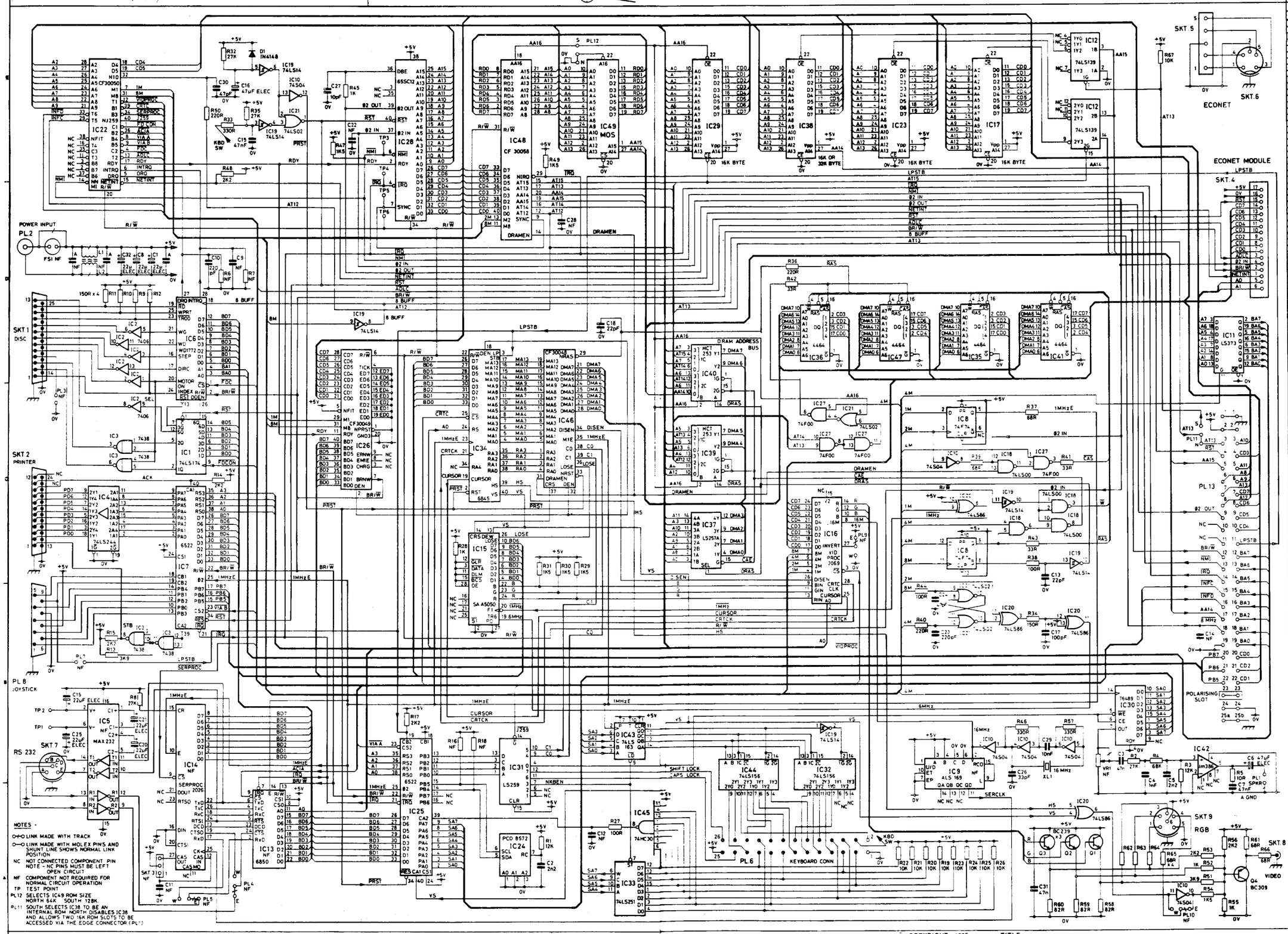

IC Nº	0V	+5V	TYPE Nº
1	8	16	74LS174
2	7	14	7406
3	7	14	7438
4	10	20	74LS244
5	15	16	MAX 232 CPE
6	14	15	WD1772
7	1	20	6522
8	7	14	74F74
9	8	16	74ALS169
10	7	14	74S04
11	10	20	74LS373
12	8	16	74LS139
13	1	12	6850
14	14	28	SERPROC 2026
15	1	18	SAA 5050
16	1	16	VIDPROC 2069
17	14	28	ROM/EPROM
18	7	14	74LS00
19	7	14	74LS14
20	7	14	74LS86
21	7	14	74LS02
22	10	30	CF 30050
23	14	28	ROM/EPROM
24	4	8	PCD8572
25	1	20	6522
26	10,32	30	CF30049
27	7	14	74F00
28	1,5,21	8	65SC12
29	14	28	ROM/EPROM
30	8	16	76489
31	8	16	74LS259
32	8	16	74LS156
33	8	16	74LS251
34	20	40	6845
35	18	9	DRAM 4464
36	18	9	DRAM 4464
37	8	16	74LS257
38	14	28	ROM/EPROM
39	8	16	74HCT253
40	8	16	74HCT253
41	18	9	DRAM 4464
42	4	8	LM 386
43	8	16	74LS163
44	8	16	74LS156
45	7	14	74HC30
46	10,20	30,40	CF30048
47	18	9	DRAM 4464
48	10,32	30	CF 30056
49	14	28	ROM/EPROM

NOTES -

- LINK MADE WITH TRACK
- LINK MADE WITH MOLEX PINS AND SHUNT LINE SHOWS NORMAL LINK POSITION
- NC NO CONNECTED COMPONENT. PIN NOTE - NC PINS MUST BE LEFT OPEN CIRCUIT
- NF COMPONENT NOT REQUIRED FOR NORMAL CIRCUIT OPERATION
- TP TEST POINT
- PL12 SELECTS IC49 ROM SIZE NORTH 64K SOUTH 128K.
- PL11 SOUTH SELECTS IC38 TO BE AN INTERNAL ROM NORTH DISABLES IC38 AND ALLOWS TWO 16K ROM SLOTS TO BE ACCESSED VIA THE EDGE CONNECTOR (PL13)

ISS	DATE	DESC OF CHANGE	DRN	CHKD
2	8.8.86	ECO E208	JADON	
1	15.5.86	AMR E183	T Mc	

SCALE | ALL DIMENSIONS IN mm UNLESS OTHERWISE STATED

MATERIAL

FINISH

WHOLE No. TOL. | DECIMAL No. TOL. | ANGLE TOL.

Copyright of this drawing is reserved by ACORN COMPUTERS LTD. It is issued on condition that it is not copied, reproduced or disclosed to a third party, either wholly or in part, without the consent in writing of ACORN COMPUTERS LTD.

© COPYRIGHT 1985
ACORN COMPUTERS Ltd.
FULBOURN ROAD
CHERRY HINTON
CAMBRIDGE CB1 4JN

ACORN COMPUTERS Ltd

TITLE: BB. MAIN PCB CIRCUIT DIAGRAM

SHEET 1 of 1

A0 | DRG. No. 0158,000/C